TECH SEMICONDUCTORS CO.,LTD.

No.162 Shengli Street,Xiangyang City,
Hubei Province,China 441021
Tel: +86 710 3506209
Fax: +86 710 3500783
Http://www.tech-sem.com
E-mail: trade@tech-sem.com

Short Form Catalog 2016

TECHSEM

All rights reserved.

No part of this publication may be reproduced in any form or by any means photocopying or recording or otherwise, without the prior written permission of the publisher, Tech Semiconductors Co., Ltd.

The contents of this guide may not be considered as an assurance of the test standard of the products.Tech Semiconductors Co., Ltd.reserves the right to make change without further notice to any products here-in. Tech Semiconductors Co., Ltd takes no charge of the possible technical and printed errors and misapprehension for this guide.

Tech Semiconductors Co., Ltd. (TECHSEM), established in 1966, is a specialized manufacturer in developing, producing and selling power semiconductor devices.

The products of TECHSEM™, which are famous for various kinds, high quality, good service reputation, are sold well in domestic market and have been exported to Europe, U.S, Korea, Japan, India, Taiwan, Southeast Asia and other countries and regions.

With hills surrounding and fine scenery, the company is located in the famous Xiangyang city which is an ideal site for producing power semiconductor devices. With more than 40 years experience of semiconductor devices manufacturing, TECHSEM has two purification buildings of over 8000m^2, in which 1000m^2 of 100 class cleaning room. Over 600 staffs work in the company, of which 136 are specialized engineers (6 engineering masters, 32 senior engineers,). TECHSEM has great advantages in technology and production capability.

TECHSEM has a perfect and effective market net covering throughout China with nearly 200 distributors and 60 sole agents. In recent years, production capability of thyristors and modules stays on the first place and sales income stays in the first three places in domestic market.

TECHSEM is pushing on the target of to be the leading competitive supplier for power semiconductors.

TECHSEM sincerely hopes to establish concrete and honest business relationship with friends to get mutually benefit and reach a bright future.

Contents

Capsule Types Devices

1 Phase Control Thyristors
4 Fast Turn-off Thyristors
6 High Frequency Thyristors
7 Bi-directional Control Thyristors
8 Rectifier Diodes
10 Fast Recovery Diodes
11 Reversely Switching Dynistors
14 Pulse Power Devices
15 Outline
30 Isolated Capsule Power Modules

Power Modules 31

32 Thyristor Modules
35 Diode Modules
38 Thyristors/Diode Modules
41 Thyristors Modules(Non-isolated type)
42 Diode Modules(Non-isolated type)
43 Thyristors/diode Modules(Non-isolated type)
45 Single/Three Phases Rectification Bridge Modules
46 Three phases Rectification Bridge+Thyristor Modules
47 Fast Turn-off Thyristor/fast Recovery Diode Modules
48 Fast Recovery Diode Modules
49 MUR200 Super Fast Recovery Diodes
50 Outline

Power Semiconductor Assemblies 68

70 Single-phase Full-bridge Assemblies of B2 Series
71 Three-phase Full-bridge Assemblies of B6 Series
72 Six-phase Bridge Assemblies of M6 Series
73 AC Switches of W Series
74 Assemblies of (B6C)2 Series
75 High-voltage Assemblies and Assemblies of HV Series
76 Outline

Heatsinks 85

90 Water Cooling Heatsinks of SS Series
96 Water Cooling Heatsinks of RSS Series
99 Water Cooling Heatsinks of SS2X Series
101 Water Cooling Heatsinks of D Series
102 Air cooling Heatsinks of SF Series
106 Moulding Heatsinks
116 Blade Type and Fin Type Heatsinks

Letter Symbols and Terms 117

Features

- Amplifying gates
- International standard cases
- Hermetic metal cases with ceramic insulators
- Capsule packages for double sided cooling

Typical Applications

- High power industrial and power transmission
- DC and AC motor control
- Controlled rectifiers
- Soft starters for induction motors
- AC controllers

Type	V_{DRM}/V_{RRM}	$I_{T(AV)}$	I_{TSM}	I_{GT}	V_{GT}	V_{TM}/I_{TM}	V_{TO}	r_T	$R_{th(j-c)}$	$R_{th(c-hs)}$	T_{jm}	Mounting Force	Outline
		T_c 85°C	10ms	25°C		125°C							
	V	A	kA	mA	V	V/A	V	m.ohm	°C/W	°C/W	°C	kN	Fig.
Y24KPA	200-600	440	8	30-200	0.8-2.0	1.11/1000	0.75	0.36	0.080	0.020	125	3.3-5.5	1
Y30KPA	200-600	690	12	35-250	0.8-2.5	1.23/1500	0.73	0.33	0.045	0.010	125	5.3-10	2
Y38KPA	200-600	1030	18	35-300	0.8-2.5	1.10/2000	0.76	0.14	0.035	0.008	125	10-20	3
Y50KPA	200-600	1710	30	40-300	0.8-3.0	1.05/3000	0.75	0.10	0.020	0.005	125	19-26	4
Y24KPC	400-1000	360	6.3	30-200	0.8-2.0	1.29/770	0.75	0.70	0.080	0.020	125	3.3-5.5	1
Y30KPC	400-1000	690	9.1	35-250	0.8-2.5	1.24/1550	0.7	0.35	0.045	0.010	125	5.3-10	2
Y35KPC	400-1000	740	11	35-250	0.8-2.5	1.40/1500	0.80	0.40	0.035	0.008	125	10-20	8
Y38KPC	400-1000	860	15	35-300	0.8-2.5	1.24/1800	0.81	0.24	0.035	0.008	125	10-20	8
Y40KPC	400-1000	930	15	35-300	0.8-2.5	1.57/2400	0.85	0.30	0.028	0.0075	125	15-20	9
Y45KPC	400-1000	1080	20	40-300	0.8-3.0	1.63/3000	0.88	0.25	0.024	0.006	125	18-25	10
Y50KPC	400-1000	1500	29	40-300	0.8-3.0	1.20/2550	0.89	0.12	0.020	0.005	125	19-26	11
Y60KPC	400-1000	1720	33	40-300	0.8-3.0	1.43/4000	0.95	0.12	0.016	0.004	125	21-30	13
Y70KPC	400-1000	2530	38	40-300	0.8-3.0	1.22/5000	0.82	0.08	0.012	0.0035	125	30-40	16
Y76KPC	400-1000	3030	60	40-300	0.8-3.0	1.17/5000	0.86	0.062	0.010	0.003	125	35-47	17
Y89KPC	400-1000	3920	66	40-300	0.8-3.0	1.18/5000	0.88	0.06	0.007	0.002	125	63-84	19
Y100KPC	400-1000	5160	74	40-300	0.8-3.0	1.18/6000	0.85	0.055	0.005	0.0015	125	81-108	20
Y24KPE	1100-1800	340	5	30-200	0.8-2.0	1.22/500	0.82	0.79	0.080	0.020	125	3.3-5.5	1
Y30KPE	1100-1800	570	8.3	35-250	0.8-2.5	1.65/1550	0.83	0.53	0.045	0.010	125	5.3-10	2
Y38KPE	1100-1800	830	14	35-300	0.8-2.5	1.28/1700	0.82	0.27	0.035	0.008	125	10-20	8
Y40KPE	1100-1800	860	12	40-300	0.8-3.0	1.75/2400	0.91	0.35	0.028	0.0075	125	15-20	9
Y45KPE	1100-1800	1010	13	40-300	0.8-3.0	1.80/3000	0.93	0.29	0.024	0.006	125	18-25	10
Y50KPE	1100-2000	1320	24	40-300	0.8-3.0	1.38/2550	0.87	0.20	0.020	0.0050	125	19-26	11

Type	V_{DRM}/V_{RRM}	$I_{T(AV)}$	I_{TSM}	I_{GT}	V_{GT}	V_{TM}/I_{TM}	V_{TO}	r_T	$R_{th(j-c)}$	$R_{th(c-hs)}$	T_{jm}	Mounting Force	Outline
		T_c 85°C	10ms	25°C		125°C							
	V	A	kA	mA	V	V/A	V	m.ohm	°C/W	°C/W	°C	kN	Fig.
Y55KPE	1100-1800	1410	26	40-300	0.8-3.0	1.49/3000	0.95	0.18	0.018	0.004	125	21-30	12
Y60KPE	1100-1800	1590	30	40-300	0.8-3.0	1.58/4000	0.98	0.15	0.016	0.004	125	21-30	13
Y65KPE	1100-1800	1980	45	40-300	0.8-3.0	1.32/3220	0.87	0.14	0.013	0.0035	125	27-34	15
Y70KPE	1100-1800	2160	38	40-300	0.8-3.0	1.50/5000	0.80	0.14	0.012	0.003	125	30-40	16
Y76KPE	1100-1800	2760	60	40-300	0.8-3.0	1.29/5000	0.84	0.09	0.010	0.0030	125	35-47	17
Y40KPH	1900-3000	600	10	40-300	0.8-3.0	2.37/1500	1.20	0.78	0.028	0.0075	125	15-20	9
Y50KPH	1900-3000	1060	23	40-300	0.8-3.0	1.87/2550	1.03	0.33	0.020	0.0050	125	19-26	11
Y55KPH	1900-3000	1240	18	40-300	0.8-3.0	1.78/3000	0.97	0.27	0.018	0.004	125	21-30	12
Y60KPH	1900-3000	1450	23.6	40-300	0.8-3.0	1.61/3000	0.98	0.21	0.016	0.004	125	21-30	13
Y70KPH	1900-3000	1760	28	40-300	0.8-3.0	1.83/4000	1.07	0.19	0.012	0.0035	125	30-40	16
Y76KPH	1900-3000	2190	33	40-300	0.8-3.0	1.44/3000	0.95	0.163	0.010	0.0030	125	35-47	17
Y38KPJ	3100-4200	420	7	35-300	0.8-2.5	2.83/1100	1.18	1.50	0.035	0.0080	125	10-20	8
Y50KPJ	3100-4200	850	15	40-300	0.8-3.0	2.18/1830	1.14	0.57	0.020	0.0050	125	19-26	11
Y65KPJ	3100-4200	1330	25	40-300	0.8-3.0	2.30/3220	1.17	0.35	0.013	0.0035	125	27-34	15
Y76KPJ	3100-4200	1850	25	40-300	0.8-3.0	1.82/3000	1.15	0.222	0.010	0.0030	125	35-47	17
Y100KPJ	3100-4200	3920	60	50-300	0.9-3.5	1.60/6000	0.88	0.12	0.005	0.0015	125	81-108	20
Y38KPM	4300-5200	390	5	35-300	0.8-3.0	2.99/1000	1.21	1.78	0.035	0.0080	125	10-20	8
Y50KPM	4300-5200	760	10	40-300	0.8-3.0	2.58/1830	1.04	0.84	0.020	0.0050	125	19-26	11
Y65KPM	4300-5200	1140	17	40-300	0.8-3.0	2.90/3220	1.23	0.52	0.013	0.0035	125	27-34	15
Y76KPM	4300-5200	1580	37	40-300	0.8-3.0	2.21/3000	1.16	0.35	0.010	0.0030	125	35-47	17
Y89KPM	4300-5200	2380	55	40-300	0.8-3.0	1.71/3000	0.99	0.24	0.007	0.0020	125	63-84	19
Y100KPM	4300-5200	3110	55	40-300	0.8-3.0	1.59/3000	0.96	0.21	0.005	0.0015	125	81-108	20

Type	V_{DRM}/V_{RRM}	$I_{T(AV)}$	I_{TSM}	I_{GT}	V_{GT}	V_{TM}/I_{TM}	V_{TO}	r_T	$R_{th(j-c)}$	$R_{th(c-hs)}$	T_{jm}	Mounting Force	Outline
		T_C 70°C	10ms	25°C		125°C							
	V	A	kA	mA	V	V/A	V	m.ohm	°C/W	°C/W	°C	kN	Fig.
H38KPN	4500-5500	400	4.5	30-300	0.8-3.0	2.80/1000	1.08	1.92	0.045	0.0080	125	10-20	23
H38KPN	4500-5500	440	4.5	30-300	0.8-3.0	2.80/1000	1.08	1.92	0.035	0.0080	125	10-20	8
H50KPN	4500-5500	850	12	30-300	0.8-3.0	1.90/1000	1.07	0.83	0.022	0.0050	125	19-26	24
H50KPN	4500-5500	920	12	30-300	0.8-3.0	1.90/1000	1.07	0.83	0.020	0.0050	125	19-26	11
H76KPN	4500-5500	1800	22	30-300	0.8-3.0	2.20/3000	1.01	0.36	0.011	0.0030	125	35-47	25
H76KPN	4500-5500	1920	22	30-300	0.8-3.0	2.20/3000	1.01	0.36	0.010	0.0030	125	35-47	14
H89KPN	4500-5500	2300	32	30-300	0.8-3.0	1.70/3000	1.03	0.25	0.009	0.0020	125	63-84	28
H100KPN	4500-5500	3500	45	30-300	0.8-3.0	1.54/3000	1.02	0.21	0.0057	0.0015	125	81-108	60
H125KPN	4500-5500	5010	72	30-300	0.8-3.0	1.50/3000	1.02	0.14	0.0040	0.0010	125	110-140	31
H38KPR	5600-6500	350	4.5	40-300	0.8-3.0	3.50/1000	1.25	2.20	0.045	0.0080	125	10-20	23
H38KPR	5600-6500	420	4.5	40-300	0.8-3.0	3.50/1000	1.25	2.20	0.035	0.0080	125	10-20	8
H50KPR	5600-6500	720	11.8	40-300	0.8-3.0	2.40/1000	1.25	1.03	0.022	0.0050	125	19-26	24
H50KPR	5600-6500	830	11.8	40-300	0.8-3.0	2.40/1000	1.25	1.03	0.020	0.0050	125	19-26	11
H65KPR	5600-6500	1000	18	40-300	0.8-3.0	2.35/1500	1.21	0.70	0.014	0.0035	125	27-34	26
H65KPR	5600-6500	1150	18	40-300	0.8-3.0	2.35/1500	1.21	0.70	0.013	0.0035	125	27-34	15
H76KPR	5600-6500	1370	22	40-300	0.8-3.0	2.12/1500	1.2	0.628	0.011	0.0030	125	35-47	25
H76KPR	5600-6500	1500	22	40-300	0.8-3.0	2.12/1500	1.2	0.628	0.010	0.0030	125	35-47	14
H89KPR	5600-6500	1800	32	40-300	0.8-3.0	1.90/1600	1.22	0.42	0.009	0.0020	125	63-84	28
H100KPR	5600-6500	2800	45	40-300	0.8-3.0	2.00/3000	1.14	0.27	0.0057	0.0015	125	81-108	60
H125KPR	5600-6500	4200	71	40-300	0.8-3.0	1.73/3000	1.15	0.17	0.004	0.0010	125	110-140	31
H38KPS	6600-7200	320	4.0	30-300	0.8-3.0	2.90/500	1.13	3.10	0.045	0.0080	125	10-20	23
H50KPS	6600-7200	650	6.4	30-300	0.8-3.0	2.90/1000	1.28	1.32	0.022	0.0050	125	19-26	24

Features

- Interdigitated amplifying gates
- Fast turn-on and high di/dt
- Low switching losses
- Short turn-off time
- Hermetic metal cases with ceramic insulators

Typical Applications

- Inductive heating
- Electronic welders
- Self-commutated inverters
- Ac motor speed control
- General power switching applications

Type	V_{DRM}/V_{RRM}	$I_{T(AV)}$	t_q	I_{TSM}	dv/dt	di/dt*	V_{TM}/I_{TM}	V_{TO}	r_T	$R_{th(j-c)}$	$R_{th(c-hs)}$	T_{jm}	Mounting Force	Outline
		T_C 55°C	125°C	10ms	125°C		125°C							
	V	A	μs	kA	V/μs	A/μs	V/A	V	m.ohm	°C/W	°C/W	°C	kN	Fig.
Y30KKE	800-1600	500	18-50	4.3	500	1200	2.82/1000	1.50	1.32	0.045	0.010	125	5.3-10	2
Y38KKE	800-1800	750	18-50	9.5	500	1200	2.35/1400	1.40	0.68	0.035	0.008	125	10-20	8
Y40KKE	800-1800	1080	18-50	10	500	1200	1.98/1800	1.30	0.38	0.028	0.0075	125	15-20	9
Y45KKE	800-1800	1220	18-50	12	500	1200	2.18/2400	1.32	0.36	0.024	0.006	125	18-25	10
Y50KKE	800-1800	1330	18-50	16	500	1200	2.22/2000	1.56	0.33	0.020	0.005	125	19-26	11
Y55KKE	800-1800	1460	18-50	17	500	1200	2.47/3000	1.51	0.32	0.018	0.004	125	21-30	12
Y60KKE	800-1800	1660	18-50	18	500	1200	2.32/3000	1.48	0.28	0.016	0.004	125	21-30	13
Y65KKE	800-1800	2080	18-50	26.6	500	1200	2.10/3000	1.41	0.23	0.013	0.0035	125	27-34	15
Y70KKE	800-1800	2240	30-60	28	500	1200	2.29/4000	1.45	0.21	0.012	0.003	125	30-40	16
Y76KKE	800-1800	2830	30-60	30.9	500	1200	1.94/4000	1.22	0.18	0.010	0.003	125	35-47	17
Y89KKE	800-1800	4240	30-60	45	500	1200	1.71/5000	1.11	0.12	0.007	0.002	125	63-84	19
Y65KKG	1900-2500	1840	40-80	21	500	1200	2.62/3600	1.43	0.33	0.013	0.0035	125	27-34	15
Y70KKG	1900-2500	2160	40-80	22.7	500	1200	2.40/4000	1.48	0.23	0.012	0.003	125	30-40	16
Y76KKG	1900-2500	2560	40-80	31	500	1200	2.48/5000	1.48	0.20	0.010	0.003	125	35-47	17
Y89KKG	1900-2500	3330	40-110	44	500	1200	2.34/5000	1.29	0.21	0.007	0.002	125	63-84	19
Y100KKG	1900-3000	4450	40-120	62	500	1200	2.25/5000	1.50	0.15	0.005	0.0015	125	81-108	20
Y89KKJ	3100-4000	3050	≤300	35	500	1200	2.20/3000	1.48	0.24	0.007	0.002	125	63-84	19
Y100KKJ	3100-4000	4100	≤300	44	500	1200	2.20/4000	1.4	0.2	0.005	0.0015	125	81-108	20
Y89KKM	4100-4800	2970	≤300	35	500	1200	2.30/3000	1.55	0.25	0.007	0.002	125	63-84	18
Y100KKM	4100-4800	4020	≤300	44	500	1200	2.30/4000	1.5	0.2	0.005	0.0015	125	81-108	21

*di/dt is the single pulse values

Non Symmetric Fast Turn-off Thyristor

Features

- Fast switching
- Low loss
- Excellent dynamic characteristics

Typical Applications

- Design for inverter supply application

Type	V_{DRM}	V_{RRM}	$I_{T(AV)}$	I_{DRM}/I_{RRM}	I_{TSM}	dv/dt	di/dt*	V_{TM}/I_{TM}	V_{TO}	r_T	$R_{th(j-c)}$	$R_{th(c-hs)}$	T_{jm}	Mounting Force	Outline
			T_c 70°C	125°C	10ms	125°C		125℃							
	V	V	A	mA	kA	V/μs	A/μs	V/A	V	m.ohm	°C/W	°C/W	°C	kN	Fig.
T76KFG	1800-2500	200-1000	2500	200	30	100	1500	2.20/5000	1.35	0.17	0.010	0.003	125	35-47	17

*di/dt is the single pulse values

High Frequency Thyristors

Features

- Interdigitated amplifying gates
- Fast turn-on and high di/dt
- Low switching losses
- Short turn-off time
- Hermetic metal cases with ceramic insulators

Typical Applications

- Inductive heating
- Electronic welders
- Self-commutated inverters
- AC motor speed control
- General power switching applications

Type	V_{DRM}/V_{RRM}	$I_{T(AV)}$	I_T/f	t_q	I_{TSM}	dv/dt	di/dt*	V_{TM}/I_{TM}	V_{TO}	r_T	$R_{th(j-c)}$	$R_{th(c-hs)}$	T_{jm}	Mounting Force	Outline
		T_c 55°C		125°C	10ms	125°C		125°C							
	V	A		μs	kA	V/μs	A/μs	V/A	V	m.ohm	°C/W	°C/W	°C	kN	Fig.
T38KAB	600-900	750	500/12	5-7	8	200	1500	2.47/1400	1.80	0.48	0.035	0.008	125	10-20	8
Y45KAB	600-900	1210	700/10	6-15	9.6	200	1500	2.23/2400	1.44	0.33	0.024	0.006	125	18-25	10
Y30KAC	800-1200	580	200/10	10-20	5.4	200	1500	2.30/1000	1.45	0.85	0.045	0.010	125	5.3-10	2
Y38KAC	800-1200	870	500/10	10-20	9	200	1500	1.97/1200	1.55	0.35	0.035	0.008	125	10-20	8
Y45KAC	800-1200	1110	500/10	10-20	11	200	1500	2.49/2400	1.41	0.45	0.024	0.006	125	18-25	10
Y50KAC	800-1200	1430	600/10	10-20	18	200	1500	1.96/2000	1.32	0.32	0.020	0.005	125	19-26	11
Y55KAC	800-1200	1730	800/8	10-20	17	200	1500	1.96/3000	1.27	0.23	0.018	0.004	125	21-30	12
Y30KAD	1100-1400	480	200/6	12-24	5.8	200	1500	2.46/600	1.67	1.32	0.045	0.010	125	5.3-10	2
Y38KAD	1100-1400	770	600/6	12-24	9.3	200	1500	2.20/1200	1.50	0.58	0.035	0.008	125	10-20	8
Y45KAD	1100-1400	1050	600/6	15-28	12	200	1500	2.42/1800	1.61	0.45	0.024	0.006	125	18-25	10
Y50KAD	1100-1400	1340	800/6	15-28	18	200	1500	2.34/2400	1.60	0.31	0.020	0.005	125	19-26	11
Y55KAD	1100-1400	1520	1000/6	15-28	18	200	1500	2.38/3000	1.63	0.25	0.018	0.004	125	21-30	12

*di/dt is the single pulse values

Bi-directional Control Thyristors

Features

- International standard cases
- Hermetic metal cases with ceramic insulators
- Capsule packages for double sided cooling

Typical Applications

- High power industrial and power transmission
- DC and AC motor control
- AC controllers
- Soft starters for induction motors

Type	V_{DRM}/V_{RRM}	$I_{T(RMS)}$	I_{TSM}	dv/dt	di/dt	I_{DRM}/I_{RRM}	V_{TM}/I_{TM}	V_{TO}	r_T	$R_{th(j-C)}$	$R_{th(C-hs)}$	T_{jm}	Mounting Force	Outline
		T_c 85°C	20ms	125°C			125°C							
	V	A	kA	V/μs	A/μs	mA	V/A	V	m.ohm	°C/W	°C/W	°C	kN	Fig.
Y30KSE	500-1800	520	5.0	50	50	30	1.78/450	0.85	1.85	0.045	0.010	125	5.3-10	2
Y35KSE	500-1800	750	7.6	50	50	40	1.75/900	0.84	1.01	0.035	0.008	125	10-20	8
Y40KSE	500-1800	930	8.8	50	50	50	1.85/1200	0.78	0.89	0.028	0.0075	125	15-20	9
Y30KSEA	500-1800	500	4.5	50	50	30	1.90/450	0.99	1.80	0.045	0.015	125	5.3-12	57
Y35KSEA	500-1800	730	7.0	50	50	40	1.61/700	0.90	1.02	0.035	0.010	125	10-20	58
Y40KSEA	500-1800	830	7.8	50	50	50	1.85/1000	1.00	0.85	0.030	0.008	125	15-20	59

Rectifier Diodes

Features

- Low forward voltage drop
- Reverse voltage up to 6500 v
- Capsule type metal-ceramic packages for double sided cooling

Typical Applications

- All purpose high power rectifier diodes
- High power resistance welding equipment
- Non-controllable and half-controllable rectifiers
- Snubber diodes

Type	V_{RRM}	$I_{F(AV)}$	I_{FSM}	V_{FM}/I_{FM}	I_{RRM}	V_{FO}	r_F	$R_{th(j-c)}$	$R_{th(c-hs)}$	T_{jm}	Mounting Force	Outline
		T_c 85℃	10ms	Tjm								
	V	A	kA	V/A	mA	V	m.ohm	℃/W	℃/W	℃	kN	Fig.
Y50ZPA	200-400	6770	50	1.10/6400	50	0.727	0.045	0.0135	0.0035	190	19-26	56
Y24ZPB	200-1000	860	8	1.46/1930	16	0.8	0.34	0.080	0.020	190	3.3-5.5	32
Y30ZPB	200-1000	1380	11	1.16/1200	30	0.87	0.24	0.045	0.010	190	5.3-10	33
Y38ZPB	200-1000	1700	18	1.82/4400	40	0.81	0.23	0.035	0.008	190	10-20	39
Y40ZPB	200-1000	2160	19	1.36/3000	50	0.86	0.165	0.028	0.0075	190	15-20	40
Y50ZPB	500-1000	3180	30	1.01/2000	80	0.79	0.11	0.020	0.005	190	19-26	42
Y65ZPB	200-1000	5630	58	0.92/5000	100	0.63	0.058	0.013	0.0035	190	27-34	44
Y76ZPB	200-1000	7460	69	0.89/5000	100	0.69	0.039	0.010	0.003	190	35-47	46
Y24ZPC	1100-2000	560	4.9	2.10/1500	16	0.8	0.86	0.080	0.020	175	3.3-5.5	32
Y30ZPC	1100-2000	1080	9	2.22/3770	30	0.98	0.33	0.045	0.010	175	5.3-10	33
Y35ZPC	1100-2000	1290	15	1.59/1800	40	1.05	0.30	0.035	0.008	175	10-20	39
Y38ZPC	1100-2000	1480	13.9	1.94/3770	40	0.85	0.29	0.032	0.008	175	10-20	39
Y40ZPC	1100-2000	1790	18	1.52/3000	50	0.90	0.204	0.028	0.0075	175	15-20	40
Y50ZPC	1100-2000	2490	25.7	1.57/4500	80	0.89	0.15	0.020	0.005	175	19-26	42
Y60ZPC	1100-2000	3520	34	1.13/4000	120	0.73	0.10	0.016	0.004	175	21-30	43
Y70ZPC	1100-2000	4520	44	1.22/5000	160	0.85	0.073	0.012	0.003	175	30-40	45
Y76ZPC	1100-2000	5220	56.4	1.31/6800	200	0.84	0.069	0.010	0.003	175	35-47	46
Y89ZPC	1100-2000	7090	83	1.01/5000	200	0.68	0.065	0.007	0.002	175	63-84	47
Y100ZPC	1100-2000	8000	94	1.28/6000	250	0.85	0.071	0.005	0.0015	175	81-108	48
Y38ZPD	2100-3000	1150	12	1.41/1500	40	0.88	0.35	0.035	0.010	160	10-20	39
Y50ZPD	2100-3000	2210	23	1.55/4500	80	0.83	0.16	0.020	0.005	160	19-26	42
Y70ZPD	2100-3000	3470	35	1.45/5000	160	0.95	0.10	0.012	0.003	160	30-40	45
Y89ZPD	2100-3000	5210	62	1.29/5000	200	0.80	0.098	0.007	0.002	160	63-84	47

Type	V_{RRM}	$I_{F(AV)}$	I_{FSM}	V_{FM}/I_{FM}	I_{RRM}	V_{FO}	r_F	$R_{th(j-c)}$	$R_{th(c-hs)}$	T_{jm}	Mounting Force	Outline
		T_c 85℃	10ms	Tjm								
	V	A	kA	V/A	mA	V	m.ohm	℃/W	℃/W	℃	kN	Fig.
Y50ZPE	3100-4200	1770	18	1.97/3800	80	0.98	0.26	0.020	0.005	160	19-26	42
Y70ZPE	3100-4200	3090	35	1.48/4000	160	0.88	0.15	0.012	0.003	160	30-40	45
Y76ZPE	3100-4200	3500	41	1.78/6000	200	0.95	0.138	0.010	0.003	160	35-47	46
Y100ZPE	3100-4200	6490	80	1.44/6000	250	0.92	0.087	0.005	0.0015	160	81-108	48
Y38ZPG	4300-5000	920	6	1.44/1000	50	0.99	0.45	0.035	0.008	150	10-20	39
Y50ZPG	4300-5000	1640	14	1.36/1500	100	0.98	0.25	0.020	0.005	150	19-26	42
Y65ZPG	4300-5000	2890	26	1.23/3000	150	0.86	0.122	0.013	0.0035	150	27-34	44
Y100ZPG	4300-5000	5650	58	1.41/5000	300	0.91	0.10	0.005	0.0015	150	81-108	48
T38ZPR	5600-6500	500*	9.5	2.20/1000	50	0.89	1.05	0.045	0.008	150	10-20	50
T50ZPR	5600-6500	970*	16.5	2.15/1500	100	0.91	0.60	0.022	0.005	150	19-26	51
T65ZPR	5600-6500	1510*	26	1.85/3000	200	0.92	0.39	0.014	0.0035	150	27-34	52
T76ZPR	5600-6500	2000*	35	1.80/3000	300	0.94	0.27	0.011	0.003	150	35-47	53

note: "*" is the current at T_c=100°C

Features

- Small recovered charge
- Soft recovery
- Up to 5000 v reverse voltage
- Capsule type metal-ceramic packages for double sided cooling

Typical Applications

- Inverse diodes for power transistors,GTO thyristors
- AC motor control
- Snubber diodes and free-wheeling diodes
- UPS

Type	V_{RRM}	$I_{F(AV)}$	I_{FSM}	I_{RRM}	t_{rr}	Q_{rr}	V_{FM}/I_{FM}	V_{FO}	r_F	$R_{th(j-c)}$	$R_{th(c-hs)}$	T_{jm}	Mounting Force	Outline
		T_c 70°C	10ms	125°C			125°C							
	V	A	kA	mA	μs	μC	V/A	V	m.ohm	°C/W	°C/W	°C	kN	Fig.
Y24ZKB	200-1000	390	5	16	2	50	1.53/600	1.10	0.72	0.080	0.020	125	3.3-5.5	32
Y30ZKB	200-1000	690	10	30	3	90	1.60/1200	1.17	0.36	0.045	0.010	125	5.3-10	33
Y38ZKB	200-1000	850	13	40	3	90	1.97/2400	1.15	0.34	0.035	0.008	125	10-20	39
Y50ZKB	200-1000	1470	22	80	4	150	1.75/3000	1.15	0.20	0.020	0.005	125	19-26	42
Y24ZKC	1100-2000	340	5.4	16	2	70	1.87/600	1.48	0.65	0.080	0.020	125	3.3-5.5	32
Y30ZKC	1100-2000	630	7.5	30	3	90	1.80/1200	1.30	0.42	0.045	0.010	125	5.3-10	33
Y38ZKC	1100-2000	780	10	40	3	130	2.20/2400	1.31	0.37	0.035	0.008	125	10-20	39
Y50ZKC	1100-2000	1330	19	80	6	250	2.00/3000	1.37	0.21	0.020	0.005	125	19-26	42
Y60ZKC	1100-2000	1830	25	100	7	550	1.96/5000	1.16	0.16	0.016	0.004	125	21-30	43
Y70ZKC	1100-2000	2340	31	150	7	1000	1.85/5000	1.10	0.15	0.012	0.003	125	30-40	45
Y76ZKC	1100-2000	3180	44	200	7	1300	1.45/5000	0.95	0.10	0.010	0.003	125	35-47	46
Y38ZKD	2100-3000	630	8.5	40	4	150	2.23/1000	1.78	0.45	0.035	0.008	125	10-20	39
Y50ZKD	2100-3000	1110	16	80	7	650	1.99/1500	1.40	0.39	0.020	0.005	125	19-26	42
Y60ZKD	2100-3000	1340	20	100	8	1010	2.18/2000	1.58	0.30	0.016	0.004	125	21-30	43
Y70ZKD	2100-3000	1670	25	180	10	1500	2.42/3000	1.55	0.29	0.012	0.003	125	30-40	45
Y24ZKG	4000-5000	210	2.7	20	4	100	3.18/500	1.36	3.63	0.080	0.020	125	3.3-5.5	32
Y38ZKG	4000-5000	480	6.5	50	6	960	3.07/1000	1.89	1.18	0.035	0.008	125	10-20	39
Y50ZKG	4000-5000	940	14	100	9	1800	2.50/1500	1.73	0.51	0.020	0.005	125	19-26	42
Y76ZKG	4000-5000	1940	27	250	12	2200	2.40/3000	1.65	0.25	0.010	0.003	125	35-47	46

Reversely Switching Dynistors

Type	Repetitive peak off-state voltage	Repetitive peak sine current pulse	Surge on-state current	Peak forward voltage	Critical rate of rise of on-state current	Critical rate of rise of off-state voltage	Trigger current	Trigger current duration	Turn-off time	Mounting force	Outline
	V_{DRM}	I_P (50μs)	I_{TSM}(10ms)	V_{TM}(@I_P)	di/dt	dv/dt	I_{RT}	T_T	t_q	F	
	kV	kA	kA	V	kA/μS	kV/μS	kA	μS	μS	kN	Fig.
Y20DSC	1.0	10	1	15	3.0	0.6	0.05	1.0~2.0	15	3.0~4.0	32
Y20DSE	1.8	10	1	20	2.5	0.6	0.05	1.5~2.5	100	3.0~4.0	32
Y38DSC	1.2	50	5	20	15	0.8	0.25	1.0~2.0	25	10~20	34
Y38DSE	1.8	50	5	20	15	0.8	0.25	1.5~2.5	60	10~20	34
Y38DSF	2.5	50	5	20	13	0.8	0.25	1.5~2.5	80	10~20	34
Y50DSE	2.0	100	10	20	25	0.8	0.5	1.5~2.5	120	19~26	35
Y50DSF	2.5	100	10	20	25	0.8	0.5	1.5~2.5	150	19~26	35
Y65DSE	2.0	180	18	20	40	0.8	1.1	1.5~3.0	120	27~34	44
Y65DSH	3.0	180	18	20	40	1.0	1.1	1.5~3.0	230	27~34	44
Y76DSE	2.0	250	25	20	60	0.8	1.5	1.5~3.0	150	35~47	46
Y76DSH	3.0	250	25	25	60	1.0	1.5	1.5~3.0	250	35~47	46

Using fields

The pulse power technologies are stimulated in many modern high technologies fields such as:

- Generator for power exciter laser pumping
- Waste water treatment by power electric discharge
- Pulse energization of electrostatic precipitator
- Power magnetron modulation

Structure and principle

Fig 1 is the RSD-Based Pulse Power Generator, consists of Main Circuit and Trigger Circuit. The Main Circuit consists of a main capacitance C, a saturable core choke L and load R_L. The Trigger Circuit consists of a switch K, capacitance C_T and R_T.

RSD is power thyristor-type device especially designed for Pulsed Power Technology. The main advantages of RSD are very low switching losses due to uniform switching over the semiconductor structure area , very high di/dt capability , zero delay time between triggering and main current pulses. These peculiarities lead to very high switching capability of RSD and to high reliability of power systems consisting of many RSD connected in parallel and in series.

Fig.1 RSD-Based Pulse Power Generator

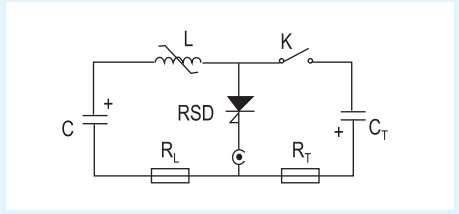

Fig.2 Equivalent structure of RSD

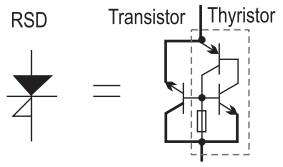

Fig 2 is the equivalent structure of RSD. When the switch K in Fig 1 is closed, the RSD is triggered by short (1~3μs) reverse current from the Trigger circuit. During this reverse, the short reverse current pulse passes through the semiconductor structure forming the thin electron-hole plasma layer in the collector junction plane. Then the applied voltage polarity returns to the initial state where the plasma layer uniformly distributes the gate electron, which injects majority carriers into the base layers of the RSD's structure. When properly triggered, the RSD can switch very high current. Fig.3 is a typical voltage and current waves on RSD switching.

Fig.3 Voltage and current waves on RSD switching

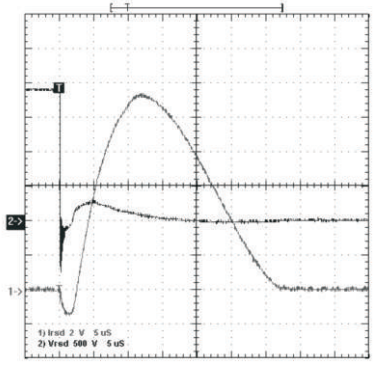

Fig.4 30KV RSD STACK

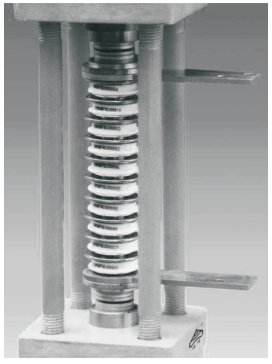

excellent performance

In comparison with traditional switches -based pulse powers, the RSD pulser is more reliable because of much better switching characteristics. Because of the high di/dt capability of RSDs, the pulse width of the low voltage pulses can be relatively short (3~5μs) and the number of magnetic cells required for pulse compression, in this case, is less than in SCR pulsers, thus providing increased efficiency. The next is RSD's excellent performance：

- high power
- easy series or parallel connections
- high reliability
- no warm-up
- long life
- low price

Features

- Interdigitated amplifying gates
- Fast turn-on and high di/dt
- Low switching losses
- Short turn-off time
- Hish pulse power current

Typical Applications

- environment protection facility
- laser facility
- electromagnetic drive

Type	I_{PK}	V_{DRM}	V_{RRM}	di/dt ability		dv/dt	T_{jm}	Mounting Force	Outline
	tp:0.3～2.0ms			di/dt	I_{PK}				
	kA	V	V	A/μs	kA	V/μs	°C	kN	Fig.
Voltage to 4500V									
T100KMJ	140	4000	4000	1500	140	1000	90	81～108	20
H100KMM	150	4200	4200	2000	150	1000	100	81～108	21
H125KMM	200	4500	4500	2000	200	1000	100	110～140	22
Voltage to 5200V									
H125KMN	150	5000	5000	1500	150	1000	100	110～140	22

Pulse Power Assembly

Pulse power semiconductor devices and assembly, 10-300kA, 10-40kV, have advantages with large surge current, fast turn-on, high di/dt, etc. As per different application at customers, special pulse thyristor, super fast semiconductor devices can be designed in assembly structures which could provide whole electrical functions including trigger, protection etc. Special pulse assembly solution can be provided according to customers application conditions and requirements.

Application: environment protection facility, laser facility, electromagnetic drive, etc.

1.KT19aT

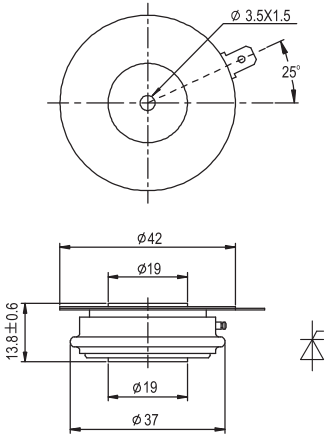

Case Style	Weight	Mounting Force
KT19aT	0.06kg	3.3~5.5kN

2.KT25aT

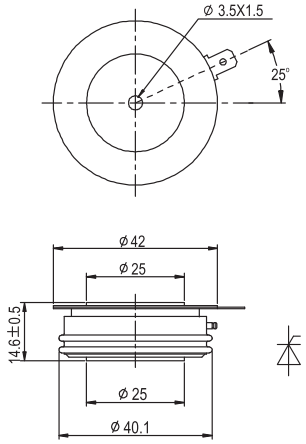

Case Style	Weight	Mounting Force
KT25aT	0.08kg	5.3~10kN

5.KT50aT

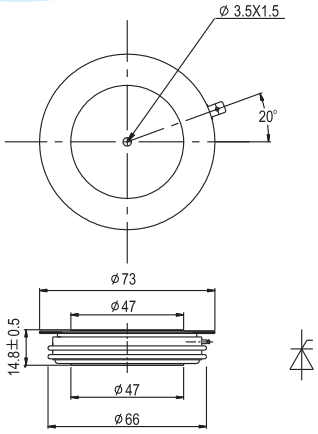

Case Style	Weight	Mounting Force
KT50aT	0.29kg	19~26kN

6.KT54aT55

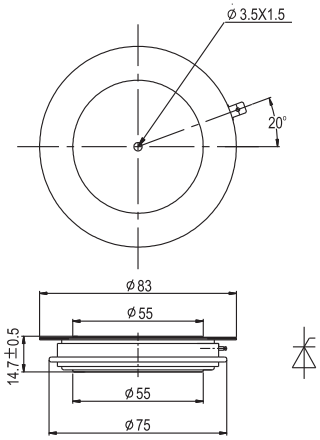

Case Style	Weight	Mounting Force
KT54aT55	0.35kg	21~30kN

3.KT33aT

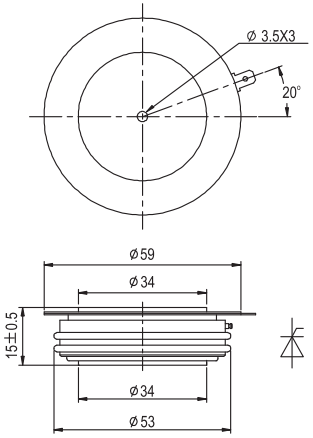

Case Style	Weight	Mounting Force
KT33aT	0.15kg	10~20kN

4.KT44aT

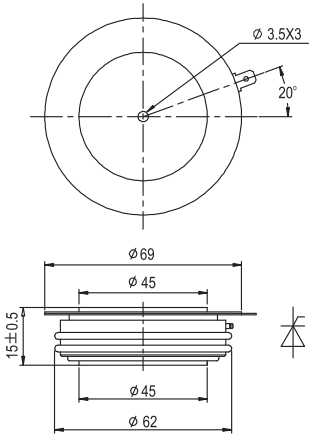

Case Style	Weight	Mounting Force
KT44aT	0.17kg	18~25kN

7.KT100aT

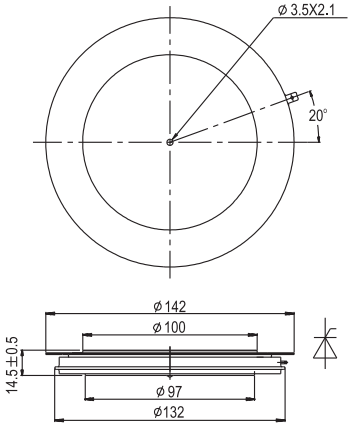

Case Style	Weight	Mounting Force
KT100aT	1.14kg	81~108kN

8.KT33cT

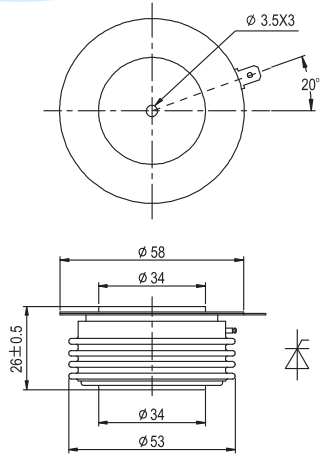

Case Style	Weight	Mounting Force
KT33cT	0.24kg	10~20kN

9.KT39cT40

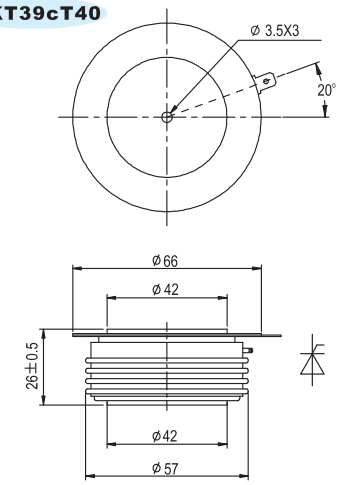

Case Style	Weight	Mounting Force
KT39cT40	0.32kg	15~20kN

10.KT44cT

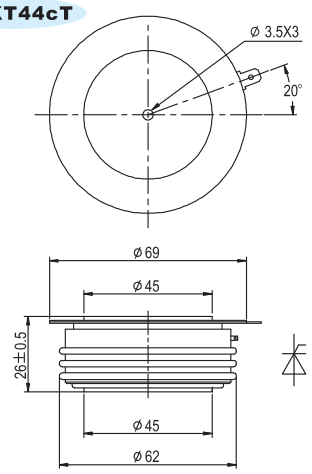

Case Style	Weight	Mounting Force
KT44cT	0.38kg	18~25kN

11.KT50cT

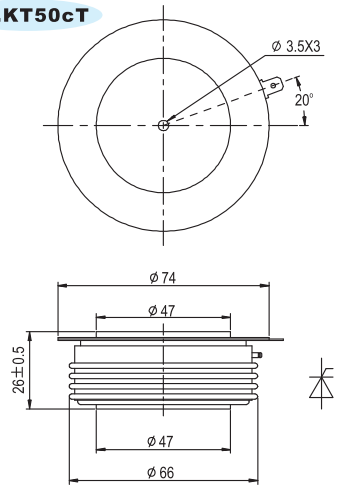

Case Style	Weight	Mounting Force
KT50cT	0.44kg	19~26kN

12.KT54cT55

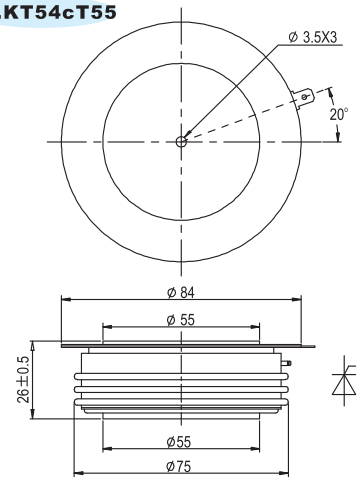

Case Style	Weight	Mounting Force
KT54cT55	0.59kg	21~30kN

13.KT54cT60

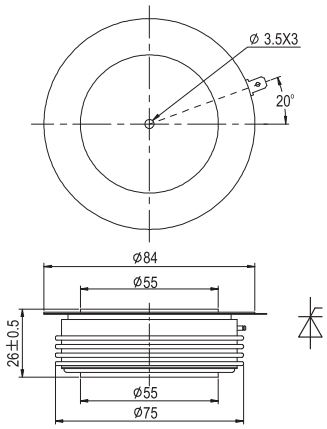

Case Style	Weight	Mounting Force
KT54cT60	0.64kg	21~30kN

14.KT60cT

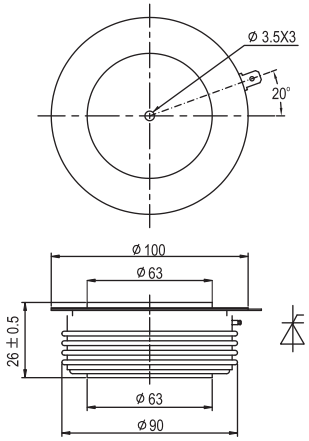

Case Style	Weight	Mounting Force
KT60cT	0. 88kg	35~47kN

15.KT60cT65

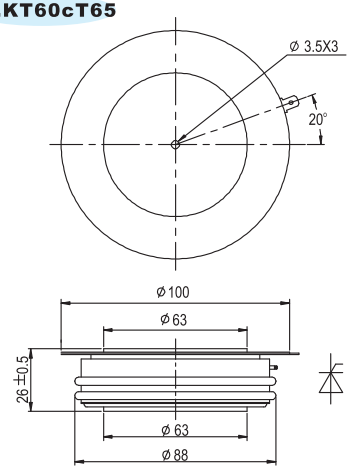

Case Style	Weight	Mounting Force
KT60cT65	0.82kg	27~34kN

16.KT60cT70

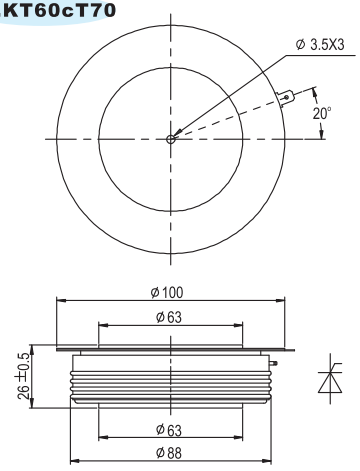

Case Style	Weight	Mounting Force
KT60cT70	0.88kg	30~40kN

17.KT73cT

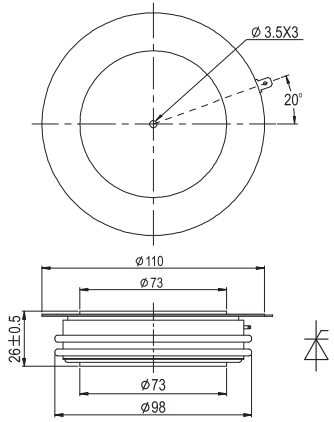

Case Style	Weight	Mounting Force
KT73cT	1.1kg	35~47kN

18.KT78cT

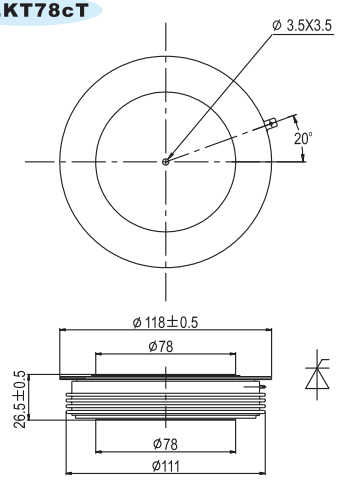

Case Style	Weight	Mounting Force
KT78cT	1.39Kg	63-84kN

21.KT100cTY

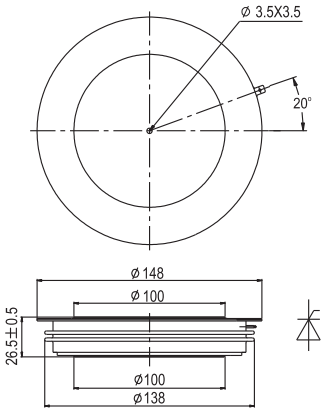

Case Style	Weight	Mounting Force
KT100cTY	1.88Kg	81-108kN

22.KT110cT

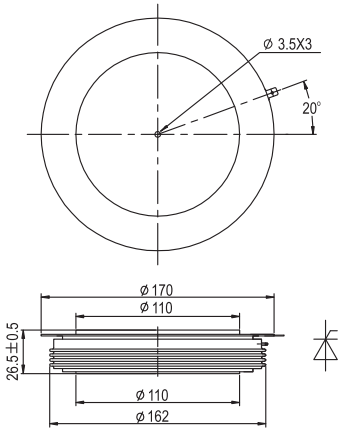

Case Style	Weight	Mounting Force
KT110cT	2.62Kg	110-140kN

19.KT84cT

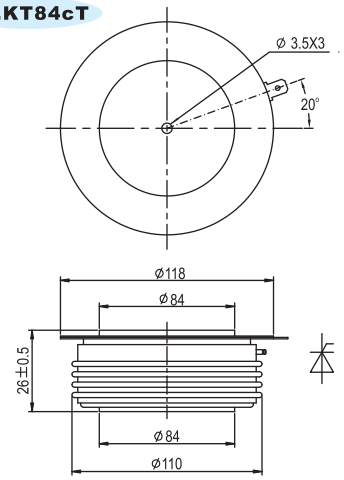

Case Style	Weight	Mounting Force
KT84cT	1.39kg	63-84kN

20.KT100cT

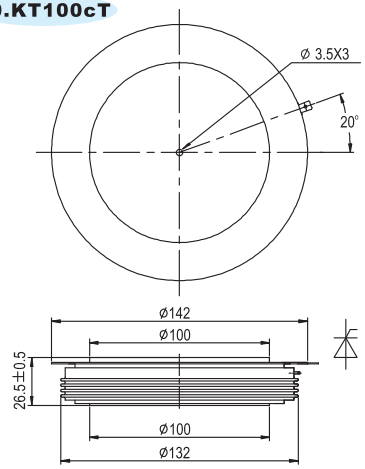

Case Style	Weight	Mounting Force
KT100cT	2Kg	81-108kN

23.KT33dT

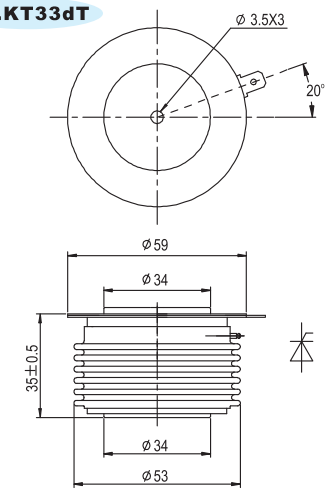

Case Style	Weight	Mounting Force
KT33dT	0.30kg	10~20kN

24.KT50dT

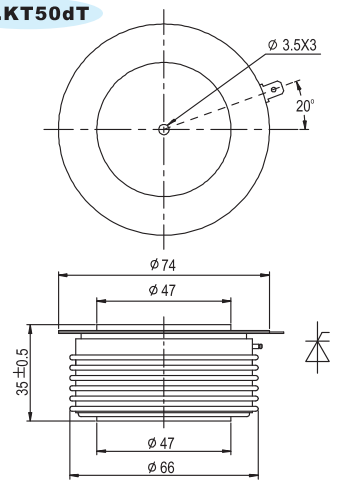

Case Style	Weight	Mounting Force
KT50dT	0.56kg	19~26kN

25.KT60dT

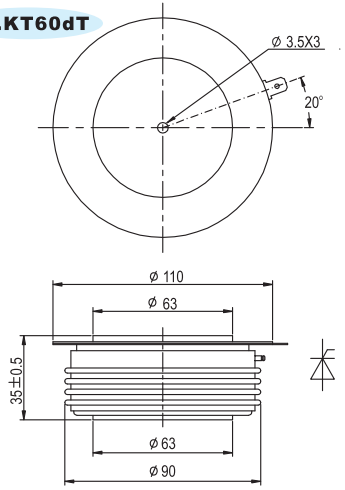

Case Style	Weight	Mounting Force
KT60dT	1.14kg	35~47kN

26.KT60dT65

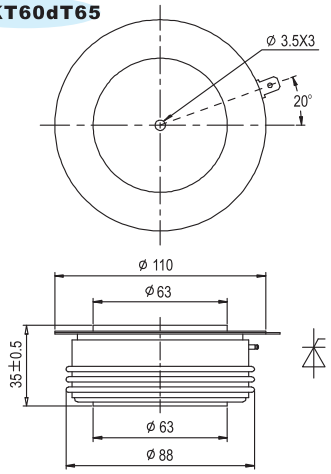

Case Style	Weight	Mounting Force
KT60dT65	1.10kg	27~34kN

29.KT84dT

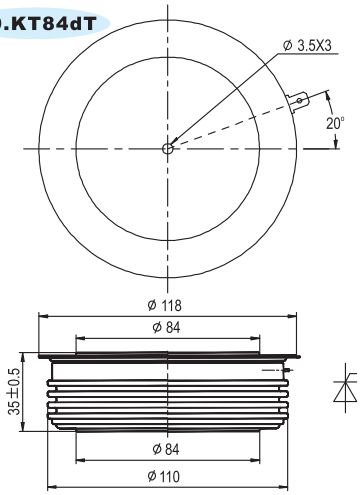

Case Style	Weight	Mounting Force
KT84dT	1.92kg	63-84kN

30.KT100dT

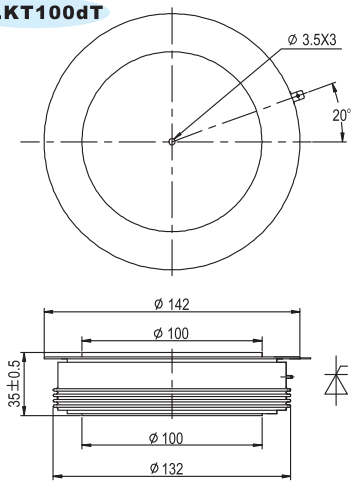

Case Style	Weight	Mounting Force
KT100dT	2.5kg	81-108kN

27.KT73dT

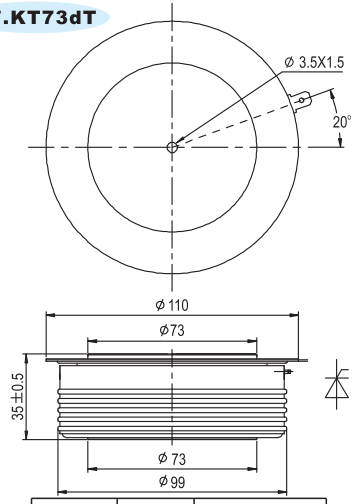

Case Style	Weight	Mounting Force
KT73dT	1.46kg	35~47kN

28.KT78dT

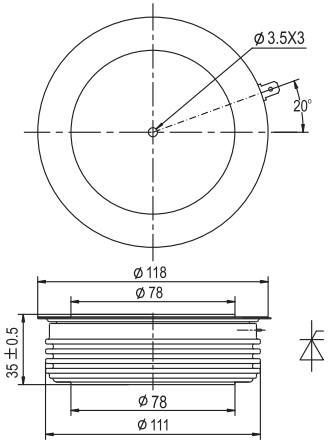

Case Style	Weight	Mounting Force
KT78dT	1.92kg	63~84kN

31.KT110dT

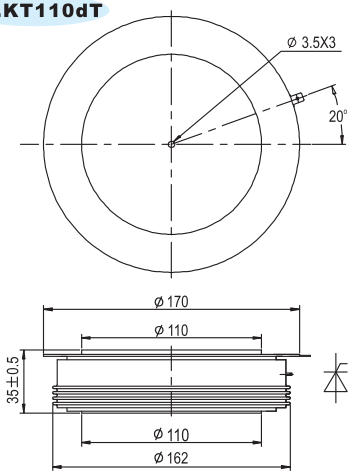

Case Style	Weight	Mounting Force
KT110dT	3.42kg	110-140kN

32.ZT19aT

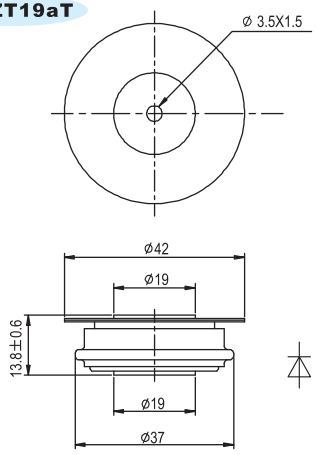

Case Style	Weight	Mounting Force
ZT19aT	0.06kg	3.3~5.5kN

33.ZT25aT

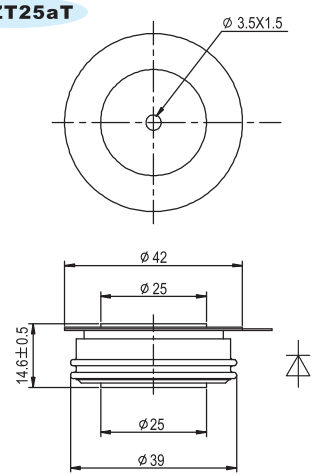

Case Style	Weight	Mounting Force
ZT25aT	0.08kg	5.3~10kN

34.ZT33aT

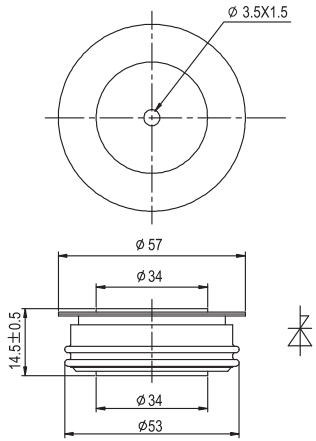

Case Style	Weight	Mounting Force
ZT33aT	0.15kg	10~20kN

37.ZT73aT

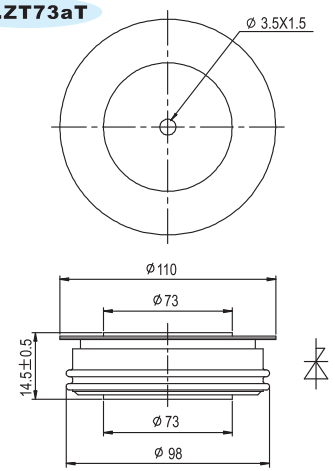

Case Style	Weight	Mounting Force
ZT73aT	0.98kg	35~47kN

38.ZT100aT

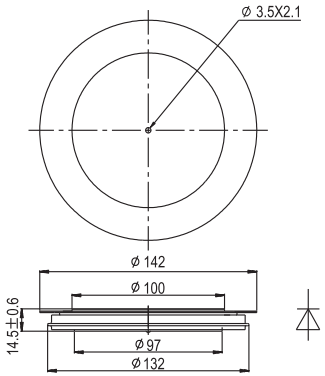

Case Style	Weight	Mounting Force
ZT100aT	1.14kg	81~108kN

35.ZT50aT

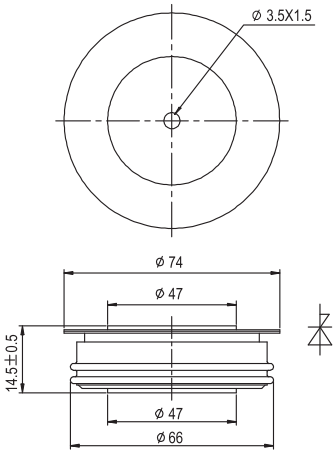

Case Style	Weight	Mounting Force
ZT50aT	0.29kg	19~26kN

36.ZT60aT

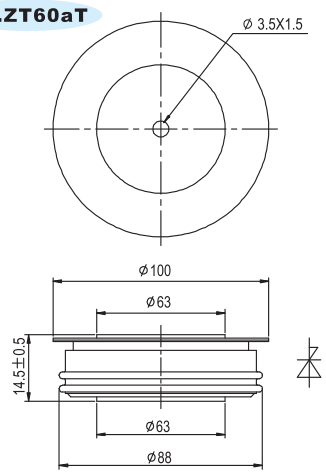

Case Style	Weight	Mounting Force
ZT60aT	0.63kg	27~34kN

39.ZT33cT

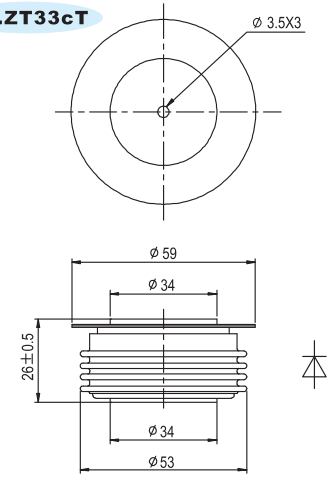

Case Style	Weight	Mounting Force
ZT33cT	0.24kg	10~20kN

40.ZT39cT40

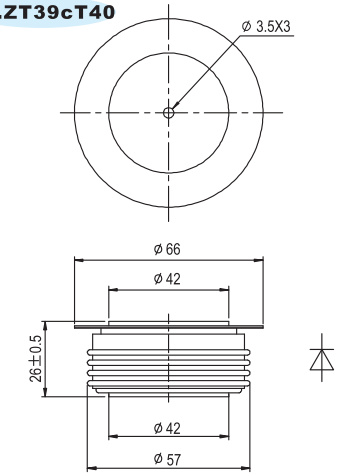

Case Style	Weight	Mounting Force
ZT39cT40	0.32kg	15~20kN

41.ZT44cT

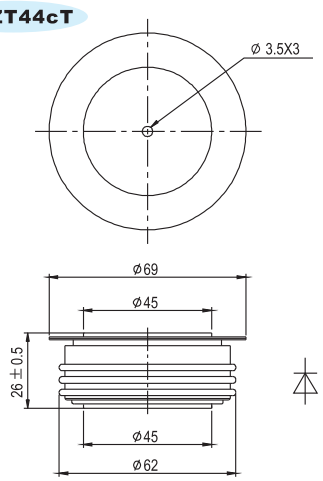

Case Style	Weight	Mounting Force
ZT44cT	0.38kg	18~25kN

42.ZT50cT

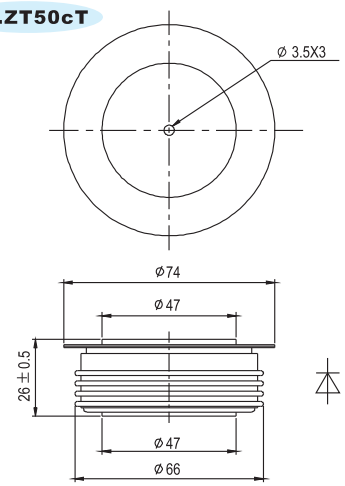

Case Style	Weight	Mounting Force
ZT50cT	0.44kg	19~26kN

43.ZT54cT60

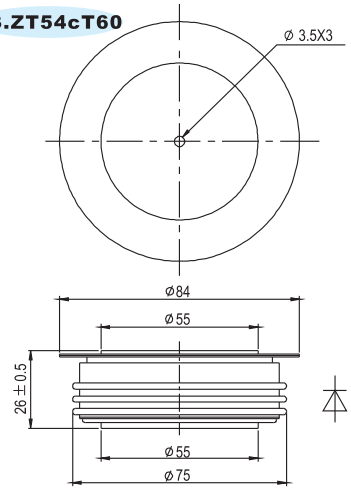

Case Style	Weight	Mounting Force
ZT54cT60	0.64kg	21~30kN

44.ZT60cT65

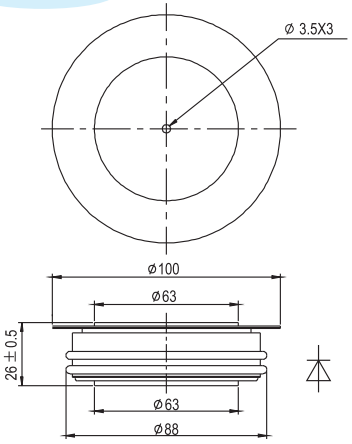

Case Style	Weight	Mounting Force
ZT60cT65	0.82kg	27~34kN

45.ZT60cT70

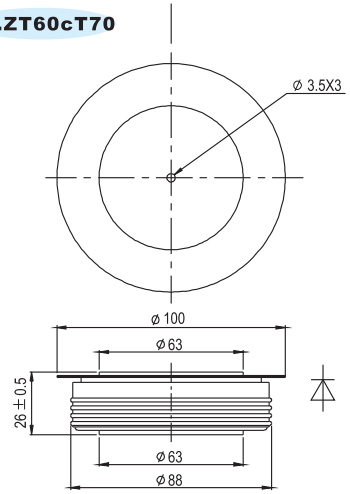

Case Style	Weight	Mounting Force
ZT60cT70	0.88kg	30~40kN

46.ZT73cT

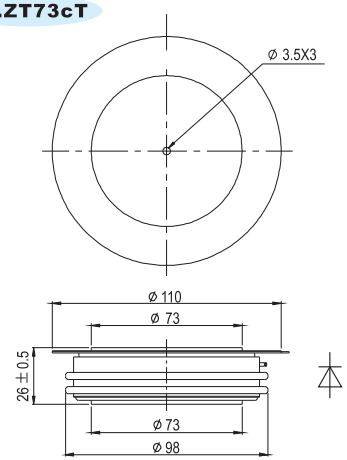

Case Style	Weight	Mounting Force
ZT73cT	1.1kg	35~47kN

47.ZT84cT

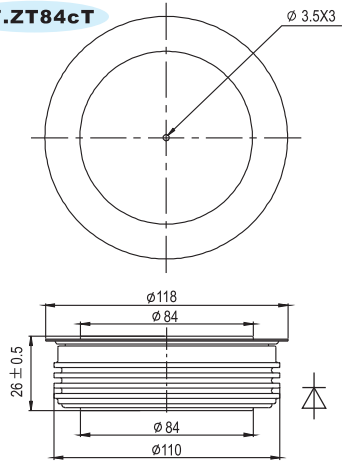

Case Style	Weight	Mounting Force
ZT84cT	1.39kg	63-84kN

48.ZT100cT

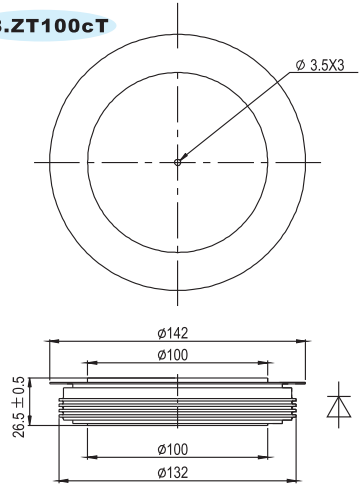

Case Style	Weight	Mounting Force
ZT100cT	2kg	81-108kN

49.ZT100cTY

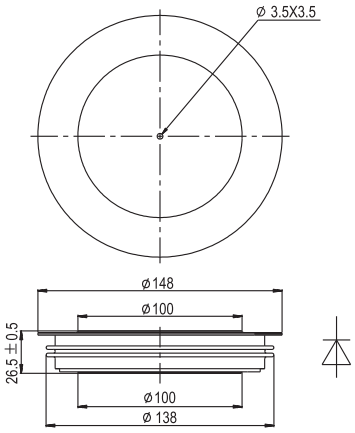

Case Style	Weight	Mounting Force
ZT100cTY	2.02kg	81-108kN

50.ZT33dT

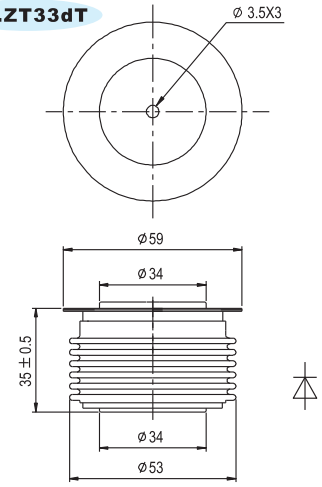

Case Style	Weight	Mounting Force
ZT33dT	0.34kg	10~20kN

51.ZT50dT

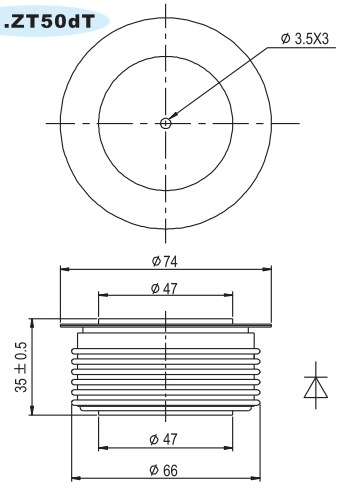

Case Style	Weight	Mounting Force
ZT50dT	0.59kg	19~26kN

52.ZT60dT65

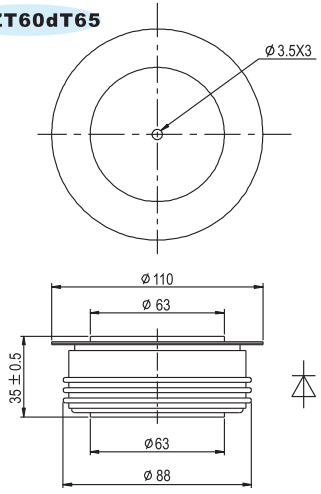

Case Style	Weight	Mounting Force
ZT60dT65	1.10kg	21~30kN

53.ZT73dT

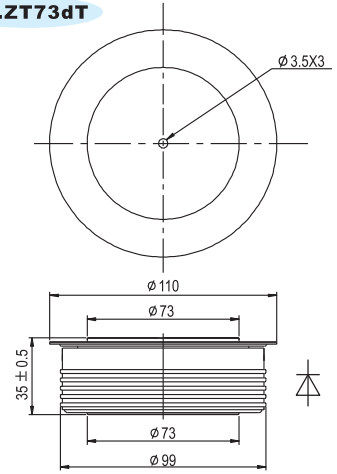

Case Style	Weight	Mounting Force
ZT73dT	1.46kg	35~47kN

54.ZT84dT

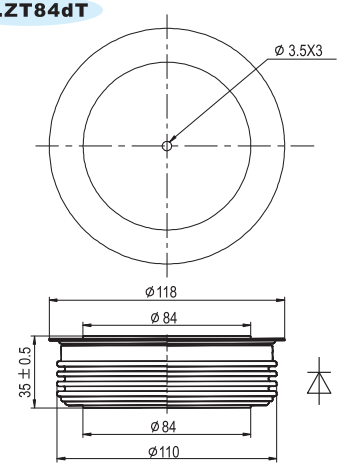

Case Style	Weight	Mounting Force
ZT84dT	1.9kg	63-84kN

55.ZT110dT

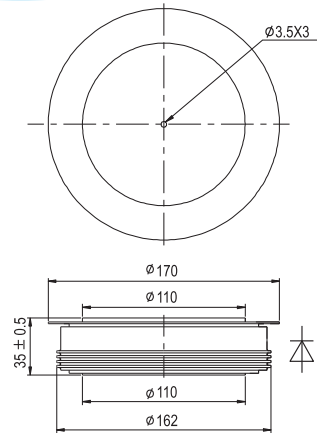

Case Style	Weight	Mounting Force
ZT110dT	3.42kg	110-140kN

56.ZT44T

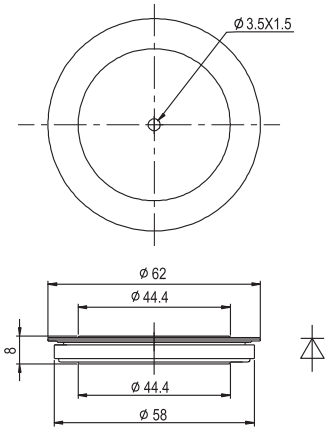

Case Style	Weight	Mounting Force
ZT44T	0.14kg	19~26kN

57.KA28

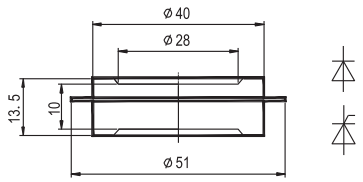

Case Style	Weight	Mounting Force
KA28	0.085kg	5.3~12kN

58.KA32

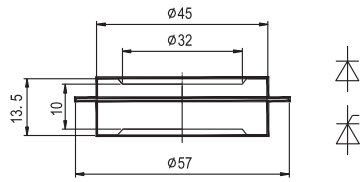

Case Style	Weight	Mounting Force
KA32	0.11kg	10~20kN

59.KA37

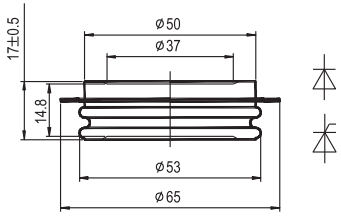

Case Style	Weight	Mounting Force
KA37	0.20kg	15~20kN

60.KT100dTY

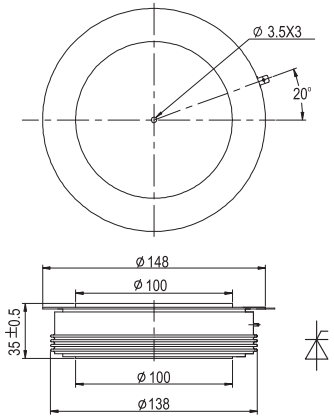

Case Style	Weight	Mounting Force
KT100dTY	2.5kg	81-108kN

The modules can comprise one or two capsule type devices on a common isolated base-plate, user only requires four fixing screws for mounting to a suitable heatsink.

Type	Number of devices	I_{TAV} @T_c70℃ A	V_{DRM}/V_{RRM} V	$R_{th(j-c)}$ ℃/W	T_{jm} ℃
MP25A-200	1	200	400-1800	0.2	125
MP25B-200	2				
MP25A-250	1	250	400-1800	0.13	125
MP25B-250	2				
MP33A-400	1	400	400-1800	0.09	125
MP33B-400	2				

MP25A

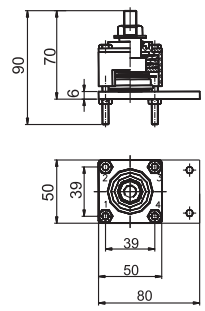

MP25B

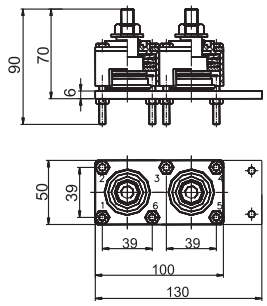

MP33A

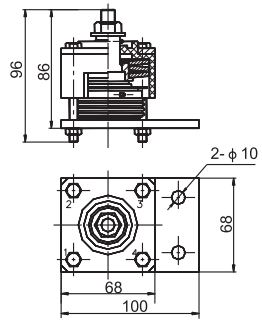

MP33B

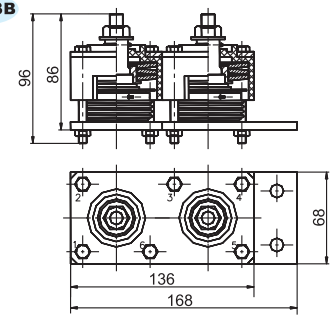

Power Modules

Features

- Isolated mounting base, 3000-4000V~
- International standard package
- Pressure contact technology with increased power cycling capability
- Simple mounting and easy maintenance
- Space and weight saving

Notes

- All dataes apply to single thyristor
- All Thermal resistance apply to single thyristor

Typical Applications

- AC/DC Motor drives
- Various rectifiers
- Heater controls
- Lighting controls
- Contactless switches
- Soft start AC motor control
- (TSC)SVC
- Welding power supply
- DC supply for PWM inverter
- Battery DC chargers or dischargers
- UPS

Type	V_{DRM}/V_{RRM}	$I_{T(AV)}$	I_{TSM}	dv/dt	di/dt	I_{DRM}/I_{RRM}	I_{GT}	V_{GT}	I_H	V_{TM}/I_{TM}	V_{TO}	r_T	$R_{th(j-c)}$	T_{jm}	V_{iso}	Outline
	125°C	T_c 85°C	125°C			125°C	25°C				125°C					
	V	A	kA	V/μs	A/μs	mA	mA	V	mA	V/A	V	m.ohm	°C/W	°C	V(AC)	Fig.
MTx26	600-1800	26	0.5	1000	200	8	100	2.5	120	1.92/330	0.85	9.68	0.95	125	3000	1/2
MTx40	600-1800	40	0.9	1000	200	8	100	2.5	120	1.88/330	0.85	5.57	0.65	125	3000	1/2
MTx55	600-1800	55	1.3	1000	200	8	100	2.5	120	1.83/330	0.85	3.47	0.53	125	3000	1/2
MTx70	600-1800	70	1.5	1000	200	10	100	2.5	120	1.78/330	0.80	2.64	0.41	125	3000	1/2
MTx90	600-1800	90	1.8	1000	200	12	100	2.5	120	1.73/330	0.80	3.01	0.28	125	3000	2/3
MTx110	600-1800	110	2.2	1000	200	12	100	2.5	120	1.69/330	0.80	2.29	0.25	125	3000	2/3
MTx135	600-1800	135	3.6	1000	200	20	150	2.5	120	1.75/550	0.80	2.60	0.18	125	3000	4/5
MTx160	600-1800	160	5.2	1000	200	20	150	2.5	120	1.70/550	0.80	1.69	0.17	125	3000	4/5
MTx182	600-1800	182	5.4	1000	200	20	150	2.5	120	1.62/550	0.80	1.26	0.16	125	3000	4/5
MTx250	600-1800	250	9	1000	200	25	180	2.5	150	1.57/750	0.80	0.85	0.12	125	3000	6
MTx285	600-1800	285	9.1	1000	200	25	180	2.5	150	1.45/750	0.80	0.42	0.12	125	3000	6
MTx330	600-1800	330	9.1	1000	200	25	180	2.5	150	1.45/750	0.80	0.53	0.12	125	3000	6
MTx350	600-1800	350	11	1000	200	35	180	2.5	150	1.45/1050	0.95	0.36	0.09	125	3000	8
MTx400	600-1800	400	12.5	1000	200	35	200	3.0	200	2.5/1500	0.80	0.49	0.08	125	3000	9/12
MT500	600-1800	500	14.5	1000	200	35	200	3.0	200	2.0/1500	0.80	0.34	0.065	125	3000	9
MTx500	600-1800	500	14.5	1000	200	35	200	3.0	200	1.54/1600	0.80	0.34	0.065	125	3000	12/13
MTx570	600-1800	570	15	1000	200	35	200	3.0	200	1.45/1600	0.80	0.20	0.065	125	3000	12

Type	V_{DRM}/V_{RRM}	$I_{T(AV)}$	I_{TSM}	dv/dt	di/dt	I_{DRM}/I_{RRM}	I_{GT}	V_{GT}	I_H	V_{TM}/I_{TM}	V_{TO}	r_T	$R_{th(j-c)}$	T_{jm}	V_{iso}	Outline
	125°C	T_c 85°C	10ms	125°C		125°C	25°C				125°C					
	V	A	kA	V/μs	A/μs	mA	mA	V	mA	V/A	V	m.ohm	°C/W	°C	V(AC)	Fig.
MTx600	600-1800	600	16	1000	200	45	200	3.0	200	2.18/1800	0.80	0.28	0.054	125	3000	13/14
MT600	600-1800	600	16	1000	200	45	200	3.0	200	2.18/1800	0.80	0.28	0.054	125	3000	15
MTx800	600-1800	800	22	1000	200	45	200	3.0	200	2.00/2400	0.80	0.20	0.042	125	3000	14
MT800	600-1800	800	22	1000	200	55	150	3.0	150	1.60/2400	0.80	0.20	0.042	125	3000	16
MTx1000	600-1800	1000	28	1000	200	55	200	3.0	200	1.65/3000	0.80	0.15	0.034	125	3000	17
MTx1200	600-1800	1200	34	1000	200	55	200	3.0	200	2.05/3000	0.80	0.09	0.031	125	3000	17

Type	V_{DRM}/V_{RRM}	$I_{T(AV)}$	I_{TSM}	dv/dt	di/dt	I_{DRM}/I_{RRM}	I_{GT}	V_{GT}	I_H	V_{TM}/I_{TM}	V_{TO}	r_T	$R_{th(j-c)}$	T_{jm}	V_{iso}	Outline
	125°C	T_c 85°C	10ms	125°C		125°C	25°C				125°C					
	V	A	kA	V/μs	A/μs	mA	mA	V	mA	V/A	V	m.ohm	°C/W	°C	V(AC)	Fig.
MTx26	1900-2500	26	0.48	1000	200	10	100	2.5	150	2.62/330	0.85	9.68	0.95	125	3000	2
MTx40	1900-2500	40	0.86	1000	200	10	100	2.5	150	2.53/330	0.85	5.57	0.65	125	3000	2
MTx55	1900-2500	55	1.24	1000	200	10	100	2.5	150	2.46/330	0.85	4.80	0.49	125	3000	2
MTx70	1900-2500	70	1.43	1000	200	12	100	2.5	150	2.42/330	0.85	3.50	0.39	125	3000	2
MTx90	1900-2500	90	1.50	1000	200	15	100	2.5	150	2.40/330	0.85	3.26	0.28	125	3000	2
MTx110	1900-2500	110	1.60	1000	200	15	100	2.5	150	2.55/550	0.85	2.25	0.25	125	3000	5
MTx135	1900-2500	135	3.6	1000	200	30	150	2.5	150	2.45/550	0.85	1.91	0.20	125	3000	5
MTx160	1900-2500	160	4.2	1000	200	30	150	2.5	150	2.30/550	0.85	1.53	0.17	125	3000	5
MTx182	1900-2500	182	4.5	1000	200	30	150	2.5	150	2.20/550	0.85	1.21	0.16	125	3000	5
MTx200	1900-2500	200	8	1000	200	35	180	2.5	150	1.84/750	0.85	1.14	0.14	125	3000	6
MTx250	1900-2500	250	9	1000	200	35	180	2.5	150	1.70/750	0.85	0.80	0.12	125	3000	6
MTx300	1900-2500	300	9.2	1000	200	45	180	2.5	150	1.99/900	0.85	0.65	0.10	125	3000	6
MTx350	1900-2500	350	11	1000	200	45	180	2.5	150	1.89/1050	0.84	0.50	0.09	125	3000	8
MT400	1900-2500	400	12.5	1000	200	45	200	3.0	200	1.74/1200	0.83	0.42	0.08	125	3000	9
MT500	1900-2500	500	14.5	1000	200	45	200	3.0	200	1.64/1500	0.85	0.39	0.06	125	3000	9
MTx400	1900-2500	400	12.5	1000	200	45	200	3.0	200	2.30/1500	0.83	0.42	0.08	125	3000	12
MTx500	1900-2500	500	14.5	1000	200	45	200	3.0	200	2.20/1500	0.85	0.39	0.06	125	3000	12
MTx500	1900-2500	500	14.5	1000	200	50	200	3.0	200	2.79/1800	0.85	0.39	0.06	125	3000	12
MT600	1900-2500	600	16	1000	200	50	200	3.0	200	2.66/1800	0.88	0.24	0.054	125	3000	15
MTx600	1900-2500	600	16	1000	200	50	200	3.0	200	2.60/2400	0.88	0.24	0.054	125	3000	14

Type	V_{DRM}/V_{RRM}	$I_{T(AV)}$	I_{TSM}	dv/dt	di/dt	I_{DRM}/I_{RRM}	I_{GT}	V_{GT}	I_H	V_{TM}/I_{TM}	V_{TO}	r_T	$R_{th(j-c)}$	T_{jm}	V_{iso}	Outline
	125°C	T_c 85°C	10ms	125°C		125°C	25°C				125°C					
	V	A	kA	V/μs	A/μs	mA	mA	V	mA	V/A	V	m.ohm	°C/W	°C	V(AC)	Fig.
MTx800	1900-2500	800	22	1000	200	50	200	3.0	200	2.40/2400	0.85	0.17	0.042	125	3000	14
MT800	1900-2500	800	22	1000	200	50	200	3.0	200	2.60/2400	0.85	0.17	0.042	125	3000	16
MTx1000	1900-2500	1000	28	1000	200	60	200	3.0	200	2.30/3000	0.85	0.14	0.034	125	3000	17
MTx1200	1900-2500	1200	34	1000	200	60	200	3.0	200	2.20/3000	0.85	0.077	0.031	125	3000	17

Type	V_{DRM}/V_{RRM}	$I_{T(AV)}$	I_{TSM}	dv/dt	di/dt	I_{DRM}/I_{RRM}	I_{GT}	V_{GT}	I_H	V_{TM}/I_{TM}	V_{TO}	r_T	$R_{th(j-c)}$	T_{jm}	V_{iso}	Outline
	125°C	T_c 85°C	10ms	125°C		125°C	25°C				125°C					
	V	A	kA	V/μs	A/μs	mA	mA	V	mA	V/A	V	m.ohm	°C/W	°C	V(AC)	Fig.
MTx200	2600-3600	200	8	1000	200	40	180	2.5	150	2.80/600	0.96	1.30	0.12	125	4000	6
MTx250	2600-3600	250	9	1000	200	55	180	2.5	150	2.95/900	0.91	0.90	0.11	125	4000	6/8
MTx300	2600-3600	300	9.2	1000	200	55	180	2.5	150	2.80/900	0.93	1.0	0.08	125	4000	8/12
MTx400	2600-3600	400	12.5	1000	200	55	200	3.0	200	2.90/1200	0.98	0.88	0.054	125	4000	12
MT400	2600-3600	400	12.5	1000	200	55	200	3.0	200	2.95/1200	0.98	0.88	0.054	125	4000	9
MTx500	2600-3600	500	14.5	1000	200	55	200	3.0	200	2.70/1500	0.95	0.51	0.050	125	4000	14

∗ MTx shows any type of MT、MTC、MTA、MTK

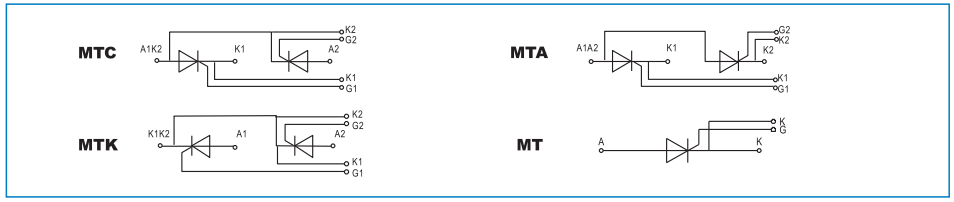

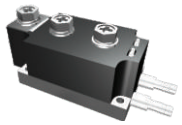

Features

- Isolated mounting base, 3000-4000 V～
- International standard package
- Pressure contact technology with increased power cycling capability
- Simple mounting and easy maintenance
- Space and weight saving

Notes

- All dataes apply to single diode
- All Thermal resistance apply to single diode

Typical Applications

- AC/DC Motor drives
- Various rectifiers
- Soft start AC motor control
- Welding power supply
- DC supply for PWM inverter
- Battery DC chargers or dischargers
- Supplies for DC power equipment

Type	V_{RRM}	$I_{F(AV)}$	I_{FSM}	I_{RRM}	V_{FM}/I_{FM}	V_{FO}	r_F	$R_{th(j-c)}$	V_{iso}	T_{jm}	Outline
	150°C	T_c100°C	10ms	150°C	25°C	150°C					
	V	A	kA	mA	V/A	V	m.ohm	°C/W	V	°C	Fig.
MDx26	600-1800	26	0.65	8	1.65/300	0.80	6.8	1.30	3000	150	1/2
MDx40	600-1800	40	1	8	1.55/300	0.80	5.57	0.90	3000	150	1/2
MDx55	600-1800	55	1.3	8	1.45/300	0.80	3.47	0.7	3000	150	1/2
MDx70	600-1800	70	1.8	8	1.40/300	0.80	2.5	0.57	3000	150	1/2
MDx90	600-1800	90	2.3	8	1.38/300	0.80	1.7	0.47	3000	150	1/2
MDx110	600-1800	110	2.6	10	1.45/330	0.80	1.74	0.35	3000	150	2
MDx135	600-1800	135	3.9	12	1.72/600	0.80	1.18	0.31	3000	150	5
MDx160	600-1800	160	4.6	12	1.56/600	0.80	1.35	0.23	3000	150	5
MDx182	600-1800	182	6.4	12	1.43/600	0.80	0.96	0.22	3000	150	5
MDx200	600-1800	200	7.5	12	1.38/600	0.75	0.88	0.21	3000	150	5
MDx250	600-1800	250	9.5	20	1.40/900	0.75	0.76	0.14	3000	150	6
MDx300	600-1800	300	9.5	20	1.35/900	0.75	0.55	0.13	3000	150	6
MDx380	600-1800	380	9.5	20	1.40/1100	0.72	0.4	0.12	3000	150	6
MDx400	600-1800	400	13	30	1.48/1200	0.75	0.5	0.10	3000	150	8
MD400	600-1800	400	13	30	1.52/1500	0.75	0.5	0.10	3000	150	9
MD500	600-1800	500	16	30	1.45/1500	0.75	0.3	0.09	3000	150	9
MD600	600-1800	600	19	30	1.35/1500	0.75	0.35	0.065	3000	150	9
MDx500	600-1800	500	16	30	1.45/1800	0.75	0.3	0.09	3000	150	12
MDx570	600-1800	570	18	30	1.45/1800	0.75	0.3	0.075	3000	150	12

Type	V_{RRM}	$I_{F(AV)}$	I_{FSM}	I_{RRM}	V_{FM}/I_{FM}	V_{FO}	r_F	$R_{th(j-c)}$	V_{iso}	T_{jm}	Outline
	150°C	T_c100°C	10ms	150°C	25°C	150°C					
	V	A	kA	mA	V/A	V	m.ohm	°C/W	V	°C	Fig.
MDx600	600-1800	600	19	30	1.50/1800	0.75	0.35	0.065	3000	150	12
MDx500	600-1800	500	16	40	1.45/1800	0.75	0.3	0.09	3000	150	12
MDx600	600-1800	600	19	40	1.50/1800	0.75	0.35	0.065	3000	150	12
MD600	600-1800	600	19	30	1.50/1800	0.75	0.35	0.065	3000	150	15
MDx800	600-1800	800	22	40	1.80/3000	0.72	0.18	0.058	3000	150	14
MDx1000	600-1800	1000	28	40	1.82/3000	0.71	0.1	0.052	3000	150	14
MD1000	600-1800	1000	28	15	1.82/3000	0.71	0.1	0.052	3000	150	16
MDx1000	600-1800	1000	28	45	1.82/3000	0.71	0.1	0.052	3000	150	17
MDx1200	600-1800	1200	34	45	1.86/3000	0.71	0.11	0.040	3000	150	17

Type	V_{RRM}	$I_{F(AV)}$	I_{FSM}	I_{RRM}	V_{FM}/I_{FM}	V_{FO}	r_F	$R_{th(j-c)}$	V_{iso}	T_{jm}	Outline
	150°C	T_c100°C	10ms	150°C	25°C	150°C					
	V	A	kA	mA	V/A	V	m.ohm	°C/W	V	°C	Fig.
MDx26	1900-2500	26	0.65	8	1.75/300	0.85	5.94	1.30	3000	150	1/2
MDx40	1900-2500	40	1	8	1.70/300	0.85	4.50	0.90	3000	150	1/2
MDx55	1900-2500	55	1.3	8	1.65/300	0.85	3.76	0.68	3000	150	1/2
MDx70	1900-2500	70	1.8	8	1.60/300	0.85	2.73	0.55	3000	150	1/2
MDx90	1900-2500	90	2.3	8	1.55/300	0.85	1.88	0.45	3000	150	1/2
MDx110	1900-2500	110	2.6	8	1.55/330	0.85	1.80	0.33	3000	150	2
MDx135	1900-2500	135	3.9	12	1.63/600	0.83	1.23	0.30	3000	150	5
MDx160	1900-2500	160	4.6	12	1.58/600	0.84	1.31	0.23	3000	150	5
MDx182	1900-2500	182	6.4	12	1.53/600	0.85	1.05	0.20	3000	150	5
MDx200	1900-2500	200	7.5	12	1.48/600	0.82	0.96	0.18	3000	150	5
MDx250	1900-2500	250	9.5	20	1.52/900	0.85	0.89	0.13	3000	150	6
MDx300	1900-2500	300	10	20	1.45/900	0.80	0.5	0.12	3000	150	6/8
MDx350	1900-2500	350	12	30	1.60/1200	0.80	0.56	0.11	3000	150	8
MDx400	1900-2500	400	13	30	1.55/1200	0.85	0.49	0.09	3000	150	8
MD400	1900-2500	400	13	30	1.40/1500	0.85	0.49	0.09	3000	150	9
MD500	1900-2500	500	16	30	1.35/1500	0.85	0.38	0.075	3000	150	9
MDx500	1900-2500	500	16	40	1.60/1800	0.85	0.38	0.075	3000	150	12
MDx570	1900-2500	570	18	40	1.55/1800	0.75	0.30	0.075	3000	150	12

Diode Modules

Type	V_{RRM}	$I_{F(AV)}$	I_{FSM}	I_{RRM}	V_{FM}/I_{FM}	V_{FO}	r_F	$R_{th(j-c)}$	V_{iso}	T_{jm}	Outline
	150°C	T_c100°C	10ms	150°C	25°C	150°C					
	V	A	kA	mA	V/A	V	m.ohm	°C/W	V	°C	Fig.
MDx600	1900-2500	600	19	40	1.53/1800	0.75	0.32	0.065	3000	150	12/14
MDx500	1900-2500	500	16	45	1.60/1800	0.85	0.38	0.075	3000	150	13
MDx800	1900-2500	800	22	45	2.00/3000	0.70	0.20	0.058	3000	150	14
MDx1000	1900-2500	1000	28	45	1.90/3000	0.71	0.10	0.052	3000	150	14/17
MDx1200	1900-2500	1200	34	50	1.85/3000	0.70	0.10	0.042	3000	150	17

Type	V_{RRM}	$I_{F(AV)}$	I_{FSM}	I_{RRM}	V_{FM}/I_{FM}	V_{FO}	r_F	$R_{th(j-c)}$	V_{iso}	T_{jm}	Outline
	150°C	T_c100°C	10ms	150°C	25°C	150°C					
	V	A	kA	mA	V/A	V	m.ohm	°C/W	V	°C	Fig.
MDx200	2600-3600	200	7.5	25	1.90/750	0.95	1.40	0.15	4000	150	6
MDx250	2600-3600	250	9.5	25	1.83/750	0.95	0.87	0.13	4000	150	6
MDx300	2600-3600	300	10	35	2.05/1050	0.95	0.7	0.11	4000	150	8
MDx350	2600-3600	350	11	35	1.95/1050	0.95	0.4	0.11	4000	150	8
MDx400	2600-3600	400	13	45	2.05/1500	0.95	0.72	0.075	4000	150	12
MDx500	2600-3600	500	15	45	1.95/1500	0.95	0.31	0.075	4000	150	12
MD500	2600-3600	500	15	35	1.95/1500	0.95	0.31	0.075	4000	150	9
MDx500	2600-3600	500	15	50	1.96/1800	0.95	0.31	0.075	4000	150	14
MDx600	2600-3600	600	17	50	1.86/1800	0.95	0.22	0.065	4000	150	14

MDx shows any type of MD、MDC、MDA、MDK

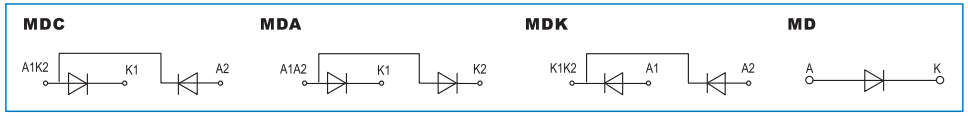

Features

- Isolated mounting base, 3000-4000 V~
- International standard package
- Pressure contact technology with increased power cycling capability
- Simple mounting and easy maintenance
- Space and weight saving

Notes

- All dataes apply to single thyristor or diode
- All Thermal resistance apply to single thyristor or diode

Typical Applications

- AC/DC Motor drives
- Various rectifiers
- Heater controls
- Lighting controls
- Contactless switches
- Soft start AC motor control
- (TSC)SVC
- Welding power supply
- DC supply for PWM inverter
- Battery DC chargers or dischargers
- UPS

Type	V_{DRM}/V_{RRM}	$I_{T(AV)}$	I_{TSM}	dv/dt	di/dt	I_{DRM}/I_{RRM}	I_{GT}	V_{GT}	I_H	V_{TM}/I_{TM}	V_{TO}	r_T	$R_{th(j-c)}$	T_{jm}	V_{iso}	Outline
	125°C	T_c 85°C	10ms	125°C		125°C	25°C				125°C					
	V	A	kA	V/μs	A/μs	mA	mA	V	mA	V/A	V	m.ohm	°C/W	°C	V	Fig.
MFx26	600-1800	26	0.5	1000	200	8	100	2.5	120	1.92/330	0.85	9.68	0.95	125	3000	1/2
MFx40	600-1800	40	0.9	1000	200	8	100	2.5	120	1.88/330	0.85	5.57	0.65	125	3000	1/2
MFx55	600-1800	55	1.3	1000	200	8	100	2.5	120	1.83/330	0.85	3.47	0.53	125	3000	1/2
MFx70	600-1800	70	1.5	1000	200	10	100	2.5	120	1.78/330	0.80	2.64	0.41	125	3000	1/2
MFx90	600-1800	90	1.8	1000	200	12	100	2.5	120	1.73/330	0.80	3.01	0.28	125	3000	2/3
MFx110	600-1800	110	2.2	1000	200	12	100	2.5	120	1.69/330	0.80	2.29	0.25	125	3000	2/3
MFx135	600-1800	135	3.6	1000	200	20	150	2.5	120	1.75/550	0.80	2.60	0.18	125	3000	4/5
MFx160	600-1800	160	5.2	1000	200	20	150	2.5	120	1.70/550	0.80	1.69	0.17	125	3000	4/5
MFx182	600-1800	182	5.4	1000	200	20	150	2.5	120	1.62/550	0.80	1.26	0.16	125	3000	4/5
MFx250	600-1800	250	9	1000	200	25	180	2.5	150	1.57/750	0.8	0.85	0.12	125	3000	6
MFx285	600-1800	285	9.1	1000	200	25	180	2.5	150	1.45/750	0.8	0.42	0.12	125	3000	6
MFx330	600-1800	330	9.1	1000	200	25	180	2.5	150	1.45/750	0.80	0.53	0.12	125	3000	6
MFx350	600-1800	350	11	1000	200	35	180	2.5	150	1.45/1050	0.95	0.36	0.09	125	3000	8
MFx400	600-1800	400	12.5	1000	200	35	200	3.0	200	2.50/1500	0.80	0.49	0.08	125	3000	12
MFx500	600-1800	500	14.5	1000	200	35	200	3.0	200	1.54/1600	0.80	0.34	0.065	125	3000	12/13
MFx570	600-1800	570	15	1000	200	35	200	3.0	200	1.45/1600	0.80	0.20	0.065	125	3000	12
MFx600	600-1800	600	16	1000	200	45	200	3.0	200	2.18/1800	0.80	0.28	0.054	125	3000	13/14

Type	V_{DRM}/V_{RRM}	$I_{T(AV)}$	I_{TSM}	dv/dt	di/dt	I_{DRM}/I_{RRM}	I_{GT}	V_{GT}	I_H	V_{TM}/I_{TM}	V_{TO}	r_T	$R_{th(j-c)}$	T_{jm}	V_{iso}	Outline
	125°C	T_C 85°C	10ms	125°C		125°C	25°C				125°C					
	V	A	kA	V/μs	A/μs	mA	mA	V	mA	V/A	V	m.ohm	°C/W	°C	V	Fig.
MFx800	600-1800	800	22	1000	200	45	200	3.0	200	2.0/2400	0.80	0.20	0.042	125	3000	14
MFx1000	600-1800	1000	28	1000	200	55	200	3.0	200	1.65/3000	0.80	0.15	0.034	125	3000	17
MFx1200	600-1800	1200	34	1000	200	55	200	3.0	200	2.05/3000	0.80	0.09	0.031	125	3000	17

Type	V_{DRM}/V_{RRM}	$I_{T(AV)}$	I_{TSM}	dv/dt	di/dt	I_{DRM}/I_{RRM}	I_{GT}	V_{GT}	I_H	V_{TM}/I_{TM}	V_{TO}	r_T	$R_{th(j-c)}$	T_{jm}	V_{iso}	Outline
	125°C	T_C 85°C	10ms	125°C		125°C	25°C				125°C					
	V	A	kA	V/μs	A/μs	mA	mA	V	mA	V/A	V	m.ohm	°C/W	°C	V	Fig.
MFx26	1900-2500	26	0.48	1000	200	10	100	2.5	150	2.62/330	0.85	9.68	0.95	125	3000	1/2
MFx40	1900-2500	40	0.86	1000	200	10	100	2.5	150	2.53/330	0.85	5.57	0.65	125	3000	1/2
MFx55	1900-2500	55	1.24	1000	200	10	100	2.5	150	2.46/330	0.85	4.80	0.49	125	3000	1/2
MFx70	1900-2500	70	1.43	1000	200	12	100	2.5	150	2.42/330	0.85	3.50	0.39	125	3000	1/2
MFx90	1900-2500	90	1.50	1000	200	15	100	2.5	150	2.40/330	0.85	3.26	0.28	125	3000	2
MFx110	1900-2500	110	1.60	1000	200	15	100	2.5	150	2.55/550	0.85	2.25	0.25	125	3000	5
MFx135	1900-2500	135	3.6	1000	200	30	150	2.5	150	2.45/550	0.85	1.91	0.20	125	3000	5
MFx160	1900-2500	160	4.2	1000	200	30	150	2.5	150	2.30/550	0.85	1.53	0.17	125	3000	5
MFx182	1900-2500	182	4.5	1000	200	30	150	2.5	150	2.20/550	0.85	1.21	0.16	125	3000	5
MFx200	1900-2500	200	8	1000	200	35	180	2.5	150	1.84/750	0.85	1.14	0.14	125	3000	6
MFx250	1900-2500	250	9	1000	200	35	180	2.5	150	1.70/750	0.85	0.80	0.12	125	3000	6
MFx300	1900-2500	300	9.2	1000	200	45	180	2.5	150	1.99/900	0.85	0.65	0.10	125	3000	6
MFx350	1900-2500	350	11	1000	200	45	180	2.5	150	1.89/1050	0.84	0.50	0.09	125	3000	8
MFx400	1900-2500	400	12.5	1000	200	45	200	3.0	200	2.30/1500	0.83	0.42	0.08	125	3000	12
MFx500	1900-2500	500	14.5	1000	200	50	200	3.0	200	2.20/1500	0.85	0.39	0.06	125	3000	12
MFx600	1900-2500	600	16	1000	200	50	200	3.0	200	2.60/2400	0.88	0.24	0.054	125	3000	14
MFx800	1900-2500	800	22	1000	200	50	200	3.0	200	2.40/2400	0.85	0.17	0.042	125	3000	14
MFx1000	1900-2500	1000	28	1000	200	60	200	3.0	200	2.30/3000	0.85	0.14	0.034	125	3000	17
MFx1200	1900-2500	1200	34	1000	200	60	200	3.0	200	2.20/3000	0.85	0.077	0.031	125	3000	17

Type	V_{DRM}/V_{RRM}	$I_{T(AV)}$	I_{TSM}	dv/dt	di/dt	I_{DRM}/I_{RRM}	I_{GT}	V_{GT}	I_H	V_{TM}/I_{TM}	V_{TO}	r_T	$R_{th(j-c)}$	T_{jm}	V_{iso}	Outline
	125°C	T_C 85°C	10ms	125°C		125°C	25°C				125°C					
	V	A	kA	V/μs	A/μs	mA	mA	V	mA	V/A	V	m.ohm	°C/W	°C	V	Fig.
MFx200	2600-3600	200	8	1000	200	40	180	2.5	150	2.80/600	0.96	1.30	0.12	125	4000	6
MFx250	2600-3600	250	9	1000	200	55	180	2.5	150	2.95/900	0.91	0.90	0.11	125	4000	6/8
MFx300	2600-3600	300	9.2	1000	200	55	180	2.5	150	2.80/900	0.93	1.0	0.08	125	4000	8/12
MFx400	2600-3600	400	12.5	1000	200	55	200	3.0	200	2.90/1200	0.98	0.88	0.054	125	4000	12
MFx500	2600-3600	500	14.5	1000	200	55	200	-3.0	200	2.70/1500	0.95	0.51	0.050	125	4000	14

MFx shows any type of MFC、MFA、MFK、MFX

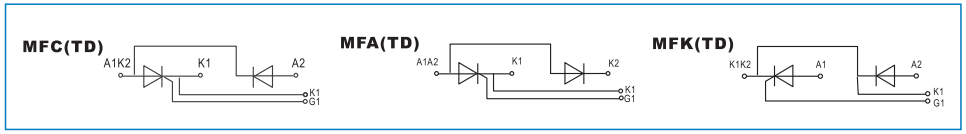

Thyristor Modules(Non-isolated type)

Features

- Non-isolated. Mounting base as common anode or cathode terminal
- International standard package
- Pressure contact technology with increased power cycling capability
- High surge current
- Low forward voltage drop

Typical Applications

- Welding Power Supply
- Various DC power supplies
- DC supply for PWM inverter
- Field supply for DC motors

Notes

- All dataes apply to single thyristor
- All Thermal resistance apply to single thyristor

MTG MTY

Type	V_{DRM}/V_{RRM}	$I_{T(AV)}$	I_{TSM}	dv/dt	di/dt	I_{DRM}/I_{RRM}	I_{GT}	V_{GT}	I_H	V_{TM}/I_{TM}	V_{TO}	r_T	$R_{th(j-c)}$	T_{jm}	Outline
	125°C	T_c 90°C		125°C			25°C				125°C				
	V	A	kA	V/μs	A/μs	mA	mA	V	mA	V/A	V	m.ohm	°C/W	°C	Fig.
MTx150	600-800	150	3.9	800	100	10	100	2.5	120	1.60/600	0.80	1.74	0.16	125	20/23
MTx200	600-800	200	5.2	800	100	10	100	2.5	120	1.42/600	0.80	1.15	0.13	125	20/23
MTx250	600-800	250	6.7	800	100	12	100	2.5	120	1.60/900	0.80	1.02	0.10	125	24
MTx300	600-800	300	8.3	800	100	12	100	2.5	120	1.40/900	0.80	0.72	0.08	125	24
MTx50	600-1800	50	1.2	800	100	8	100	2.5	120	1.83/300	0.80	5.41	0.48	125	21
MTx100	600-1800	50	2.5	800	100	8	100	2.5	120	1.67/300	0.80	2.45	0.25	125	21
MTx150	1000-1800	150	3.9	800	100	12	100	2.5	120	1.80/600	0.80	1.74	0.16	125	20/23
MTx200	1000-1800	200	5.2	800	100	12	100	2.5	120	1.62/600	0.80	1.15	0.13	125	20/23
MTx250	1000-1800	250	6.7	800	100	15	100	2.5	120	1.78/900	0.80	1.02	0.10	125	24
MTx300	1000-1800	300	8.3	800	100	15	100	2.5	120	1.58/900	0.80	0.72	0.08	125	24

MTx shows any type of MTG、MTY

Diode Modules (Non-isolated type)

Features

- Non-isolated. Mounting base as common anode or cathode terminal
- International standard package
- Pressure contact technology with increased power cycling capability
- Max junction temperature up to 150℃
- High surge current
- Low forward voltage drop

Typical Applications

- Welding Power Supply
- Various DC power supplies
- DC supply for PWM inverter
- Field supply for DC motors

Notes

- All dataes apply to single diode
- All Thermal resistance apply to single diode

MDG MDY

Type	V_{RRM}	$I_{F(AV)}$	I_{FSM}	I_{RRM}	V_{FM}/I_{FM}	V_{FO}	r_F	$R_{th(j-c)}$	T_{jm}	Outline
	150°C	T_c 100°C	10ms	150°C	25°C	150°C				
	V	A	kA	mA	V/A	V	m.ohm	°C/W	°C	Fig.
MDx50	600-1800	50	1.4	6	1.67/300	0.80	4.78	0.70	150	21
MDx100	600-1800	100	2.8	6	1.57/300	0.80	2.13	0.38	150	21
MDx150	600-1800	150	4.6	8	1.60/600	0.80	1.53	0.24	150	20/23
MDx200	600-1800	200	6.2	8	1.50/600	0.80	0.96	0.20	150	20/23
MDx250	600-1800	250	7.8	10	1.60/900	0.80	0.87	0.15	150	24
MDx300	600-1800	300	10	10	1.50/900	0.80	0.64	0.13	150	24

MDx shows any type of MDG、MDY

Type	V_{RRM}	$I_{F(AV)}$	I_{FSM}	I_{RRM}	V_{FM}/I_{FM}	V_{FO}	r_F	$R_{th(j-c)}$	T_{jm}	Outline
	150°C	T_c 100°C	10ms	150°C	25°C	150°C				
	V	A	kA	mA	V/A	V	m.ohm	°C/W	°C	Fig.
MDx150	600-1800	150	4.6	8	1.60/600	0.80	1.53	0.24	150	22
MDx200	600-1800	200	6.2	8	1.50/600	0.80	0.96	0.20	150	22/25
MDx250	600-1800	250	7.8	10	1.60/900	0.80	0.87	0.15	150	25
MDx300	600-1800	300	10	10	1.50/900	0.80	0.64	0.13	150	25

MDx shows any type of MD(NA) 、MD(NK)

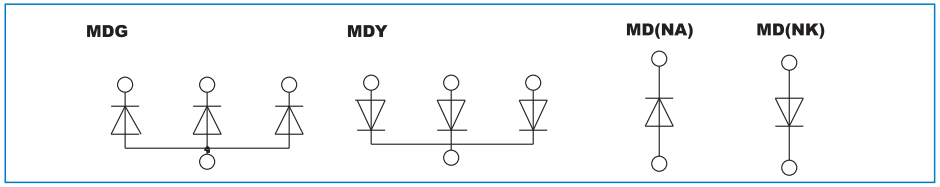

Features

- Non-isolated. Mounting base as common anode or cathode terminal
- International standard package
- Pressure contact technology with increased power cycling capability
- High surge current
- Low forward voltage drop

Typical Applications

- Welding Power Supply
- Various DC power supplies
- DC supply for PWM inverter
- Field supply for DC motors

Notes

- All dataes apply to single thyristor or diode
- All Thermal resistance apply to single thyristor or diode

MFG MFY

Type	V_{DRM}/V_{RRM}	$I_{T(AV)}$	I_{TSM}	dv/dt	di/dt	I_{DRM}/I_{RRM}	I_{GT}	V_{GT}	I_H	V_{TM}/I_{TM}	V_{TO}	r_T	$R_{th(j-c)}$	T_{jm}	Outline
	125°C	T_c 90°C		125°C			25°C				125°C				
	V	A	kA	V/μs	A/μs	mA	mA	V	mA	V/A	V	m.ohm	°C/W	°C	Fig.
MFx150	600-800	150	3.9	800	100	10	100	2.5	120	1.60/600	0.80	1.74	0.16	125	20/23
MFx200	600-800	200	5.2	800	100	10	100	2.5	120	1.42/600	0.80	1.15	0.13	125	20/23
MFx250	600-800	250	6.7	800	100	12	100	2.5	120	1.60/900	0.80	1.02	0.10	125	24
MFx300	600-800	300	8.3	800	100	12	100	2.5	120	1.40/900	0.80	0.72	0.08	125	24
MFx50	600-1800	50	1.2	800	100	8	100	2.5	120	1.83/300	0.80	5.41	0.48	125	21
MFx100	600-1800	50	2.5	800	100	8	100	2.5	120	1.67/300	0.80	2.45	0.25	125	21
MFx150	1000-1800	150	3.9	800	100	12	100	2.5	120	1.80/600	0.80	1.74	0.16	125	20/23
MFx200	1000-1800	200	5.2	800	100	12	100	2.5	120	1.62/600	0.80	1.15	0.13	125	20/23
MFx250	1000-1800	250	6.7	800	100	15	100	2.5	120	1.78/900	0.80	1.02	0.10	125	24
MFx300	1000-1800	300	8.3	800	100	15	100	2.5	120	1.58/900	0.80	0.72	0.08	125	24

MFx shows any type of MFG、MFY

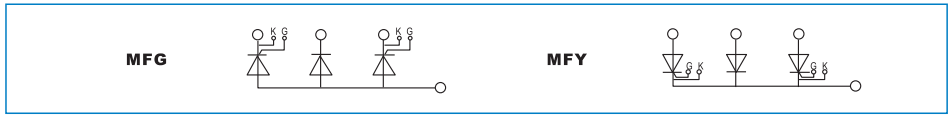

Type	V_{DRM}/V_{RRM}	$I_{T(AV)}$	I_{TSM}	dv/dt	di/dt	I_{DRM}/I_{RRM}	I_{GT}	V_{GT}	I_H	V_{TM}/I_{TM}	V_{TO}	r_T	$R_{th(j-c)}$	T_{jm}	Outline
	125°C	T_c 90°C	10ms	125°C			25°C				125°C				
	V	A	kA	V/μs	A/μs	mA	mA	V	mA	V/A	V	m.ohm	°C/W	°C	Fig.
MTx200	600-800	200	8	800	100	12	100	2.5	120	1.80/900	0.8	1.1	0.13	125	25
MTx250	600-800	250	9	800	100	12	100	2.5	120	1.60/900	0.8	0.77	0.11	125	25
MTx300	600-800	300	9.2	800	100	12	100	2.5	120	1.40/900	0.8	0.66	0.09	125	25
MTx150	600-1800	150	5.6	800	100	12	100	2.5	120	1.80/600	0.8	1.55	0.17	125	22
MTx200	600-1800	200	8	800	100	12	100	2.5	120	1.62/600	0.8	1.1	0.13	125	22
MTx200	1000-1800	200	8	800	100	15	100	2.5	120	1.98/900	0.8	1.11	0.13	125	25
MTx250	1000-1800	250	9	800	100	15	100	2.5	120	1.78/900	0.8	0.77	0.11	125	25
MTx300	1000-1800	300	9.2	800	100	15	100	2.5	120	1.58/900	0.8	0.66	0.09	125	25

MTx shows any type of MT(NA)、MT(NK)

Type	V_{DRM}/V_{RRM}	$I_{T(AV)}$	I_{TSM}	dv/dt	di/dt	I_{DRM}/I_{RRM}	I_{GT}	V_{GT}	I_H	V_{TM}/I_{TM}	V_{TO}	r_T	$R_{th(j-c)}$	T_{jm}	Outline
	125°C	T_c 90°C	10ms	125°C			25°C				125°C				
	V	A	kA	V/μs	A/μs	mA	mA	V	mA	V/A	V	m.ohm	°C/W	°C	Fig.
MTx/MFx400	3700-4200	400	10	800	100	100	200	3.0	200	3.60/1200	0.98	0.64	0.054	125	8
MTx/MFx800	3700-4200	800	20	800	100	100	200	3.0	200	3.80/2400	0.96	0.16	0.034	125	14

MFx shows any type of MTG、MTY、 MTC(N)、MTA(N)、MTK(N)
MFx shows any type of MFC(TDN)、MFA(TDN)、MFK(TDN)、MFC(DTN)、MFA(DTN)、MFK(DTN)

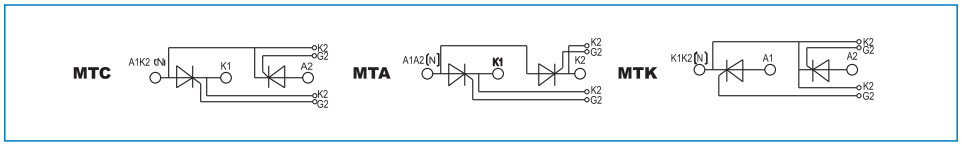

Single/Three Phases Rectification Bridge Modules

Features

- Isolated mounting base, 2500 V～
- International standard package
- Solder joint technology with increased power cycling capability
- Simple mounting and easy maintenance
- Space and weight saving
- Max junction temperature up to 150℃
- Low forward voltage drop

Typical Applications

- Supplies for DC power equipment
- DC supply for PWM inverter
- Battery DC power supplies
- Field supply for DC motors
- Soft start Capacitor Charging
- Electric drives and auxiliaries
- Inverter welder
- Input rectifier for switch mode power supplies(SMPS)

Notes

- All dataes apply to single diode
- All Thermal resistance apply to single diode

MDQ

Type	V_{RRM}	I_o	I_{FSM}	I^2t	I_{RRM}	V_{FM}/I_{FM}	V_{FO}	r_F	$R_{th(j-c)}$	T_{jm}	V_{iso}	Outline
		T_c 100°C	10ms		150°C	25°C	150°C					
	V	A	kA	kA^2S	mA	V/A	V	m.ohm	°C/W	°C	V	Fig.
MDQ50	600-1800	50	0.6	1.8	8	1.25/75	070	6.0	0.24	150	2500	26\28\30\32
MDQ75	600-1800	75	0.8	3.2	8	1.38/120	0.70	4.2	0.20	150	2500	26\28\30\32
MDQ100	600-1800	100	1.3	8.6	12	1.30/150	0.75	2.4	0.14	150	2500	34\36
MDQ150	600-1800	150	1.8	16.5	12	1.45/230	0.75	1.9	0.10	150	2500	34\36

MDS

Type	V_{RRM}	I_o	I_{FSM}	I^2t	I_{RRM}	V_{FM}/I_{FM}	V_{FO}	r_F	$R_{th(j-c)}$	T_{jm}	V_{iso}	Outline
		T_c 100°C	10ms		150°C	25°C	150°C					
	V	A	kA	kA^2S	mA	V/A	V	m.ohm	°C/W	°C	V(AC)	Fig.
MDS50	600-1800	50	0.40	0.80	8	1.20/50	0.70	6.0	0.30	150	2500	27\29\31\33
MDS75	600-1800	75	0.60	1.80	8	1.25/75	0.70	5.0	0.24	150	2500	27\29\31\33
MDS100	600-1800	100	0.80	3.20	8	1.30/100	0.70	4.5	0.20	150	2500	27\29\31\33
MDS150	600-1800	150	1.30	8.60	12	1.30/150	0.75	2.4	0.14	150	2500	35\37
MDS175	600-1800	175	1.50	11.5	12	1.35/175	0.75	2.2	0.12	150	2500	35\37
MDS200	600-1800	200	1.70	14.7	12	1.35/200	0.75	2.0	0.10	150	2500	35\37

MDQ

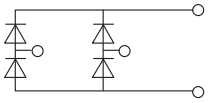

MDS

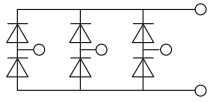

Three Phases Rectification Bridge + Thyristor Modules

Features

- Isolated mounting base, 2500 V～
- International standard package
- Solder joint technology with increased power cycling capability
- Simple mounting and easy maintenance
- Simple design, module and SCR rectifier bridge close 2 for one, small volume, light weight

Typical Applications

- Supplies for DC power equipment
- Field supply for DC motors
- Inverter welder

Notes

- All dataes apply to single thyristor or diode
- All Thermal resistance apply to single thyristor or diode

MDST

Type	Thyristor / Diode	V_{DRM}/V_{RRM} / V_{RRM}	I_o	I_{TSM} / I_{FSM}	I_{DRM}/I_{RRM} / I_{RRM}	I_{GT}	V_{GT}	I_H	V_{TM}/I_{TM} / V_{FM}/I_{FM}	V_{TO} / V_{FO}	r_T / r_F	$R_{th(j-c)}$	T_{jm}	V_{iso}	Outline
			T_c100°C	10ms	125°C	25°C				125°C					
		V	A	kA	mA	mA	V	mA	V/A	V	m.ohm	°C/W	°C	V(AC)	
MDST50	Thyristor	600-1800	50	0.73	25	100	2.5	150	1.55/150	0.85	4.3	0.80	125	2500	38
	Diode	600-1800	50	0.73	8	\	\	\	1.25/50	0.85	4.3	0.30	125		
MDST75	Thyristor	600-1800	75	0.91	25	100	2.5	150	1.60/230	0.85	3.1	0.40	125	2500	38
	Diode	600-1800	75	0.91	8	\	\	\	1.28/75	0.85	3.1	0.25	125		
MDST100	Thyristor	600-1800	100	1.18	30	100	2.5	150	1.65/300	0.85	2.3	0.36	125	2500	38
	Diode	600-1800	100	1.18	12	\	\	\	1.30/100	0.85	2.3	0.20	125		
MDST150	Thyristor	600-1800	150	1.45	45	100	2.5	150	1.70/450	0.85	1.6	0.20	125	2500	39
	Diode	600-1800	150	1.45	15	\	\	\	1.35/150	0.85	1.6	0.15	125		
MDST200	Thyristor	600-1800	200	1.85	50	100	2.5	150	1.75/600	0.85	1.2	0.12	125	2500	39
	Diode	600-1800	200	1.85	20	\	\	\	1.40/200	0.85	1.2	0.10	125		

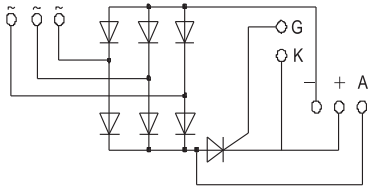

Fast Turn-off Thyristor/Fast Recovery Diode Modules

Features

- Isolated mounting base, 2500 V～
- International standard package
- Pressure contact technology with increased power cycling capability
- Simple mounting and easy maintenance
- Space and weight saving

Typical Applications

- Inverter
- Inductive heating
- Chopper

Notes

- All dataes apply to single thyristor or diode
- All Thermal resistance apply to single thyristor or diode

MKX MHX

Type	$V_{DRM}V_{RRM}$	$I_{T(AV)}$ @T_C	I_{TSM}	dv/dt	di/dt	tq	$I_{DRM}I_{RRM}$	I_{GT}	V_{GT}	I_H	V_{TM}/I_{TM}	V_{TO}	r_T	$R_{th(j-c)}$	V_{iso}	T_{jm}	Outline
	115°C	Tc85°C	10ms	115°C		100°C	115°C	25°C				115°C					
	V	A	kA	V/μs	A/μs	us	mA	mA	V	mA	V/A	V	m.ohm	°C/W	V	°C	Fig.
MHC55	1100/1200	55	1.2	1000	120	12-25	25	150	2.0	250	2.20/230	0.8	4.2	0.40	2500	115	2
MKx/MHx75	600-1800	75	1.6	800	200	15-35	30	150	2.5	200	2.60/225	0.85	4.88	0.20	2500	115	4
MKx/MHx150	600-1800	150	3.4	800	200	15-35	50	180	2.5	200	2.25/600	0.85	1.66	0.14	2500	115	6
MKx/MHx200	600-1800	200	4.8	800	200	15-35	50	180	2.5	200	2.15/600	0.90	1.15	0.10	2500	115	6
MKx/MHx250	600-1800	250	5.6	800	200	15-35	80	200	3.0	200	2.23/900	0.90	0.98	0.08	2500	115	8
MKx/MHx300	600-1800	300	7.3	800	200	15-35	80	200	3.0	200	2.15/900	0.90	0.74	0.07	2500	115	8
MKx/MHx300	600-1800	300	7.3	800	200	15-35	100	200	3.0	200	2.55/1200	0.90	0.74	0.07	2500	115	13
MKx/MHx400	600-1800	400	7.8	800	200	15-35	100	200	3.0	200	2.40/1200	0.90	0.35	0.06	2500	115	13
MKx/MHx70	1900-2500	70	1.4	800	200	15-35	30	180	3.0	200	3.20/300	0.95	4.90	0.23	3000	115	4

MKx shows any type of MK、MKC、MKA、MKK;
MHx shows any type of MHC(KZ)、MHA(KZ)、MHK(KZ)、MHC(ZK)、MHA(ZK)、MHK(ZK)

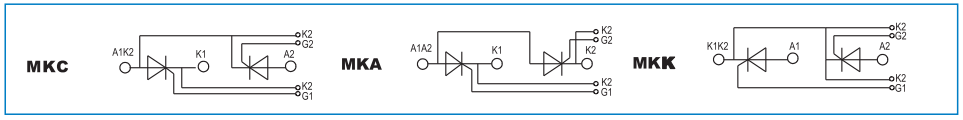

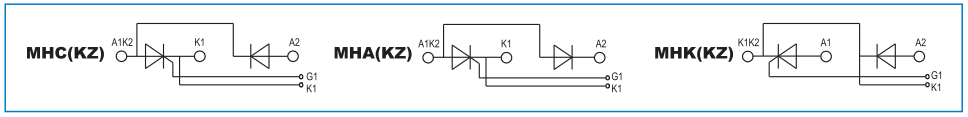

Fast Recovery Diode Modules

Features

- Isolated mounting base, 2500 V～
- International standard package
- Pressure contact technology with increased power cycling capability
- Simple mounting and easy maintenance
- Space and weight saving

Typical Applications

- Inverter
- Inductive heating
- Chopper

Notes

- All dataes apply to single thyristor or diode
- All Thermal resistance apply to single thyristor or diode

MZX

Type	$V_{DRM}V_{RRM}$	$I_{T(AV)}$ @T_C	I_{TSM}	I_{RRM}	V_{FM}/I_{FM}	trr	V_{FO}	r_F	$R_{th(j-c)}$	V_{iso}	T_{jm}	Outline
	140°C	Tc100°C	140°C		25°C	140°C						
	V	A	kA	mA	V/A	μs	V	m.ohm	°C/W	V	°C	Fig.
MZx75	600-1800	75	2	20	2.20/225	1.5	0.8	4.25	0.31	2500	140	4
MZx150	600-1800	150	3.8	40	1.85/600	2.0	0.8	1.38	0.21	2500	140	6
MZx200	600-1800	200	5.5	40	1.77/600	3.0	0.85	0.92	0.15	2500	140	6
MZx250	600-1800	250	6.2	70	1.83/900	4.0	0.85	0.76	0.12	2500	140	8
MZx300	600-1800	300	8.3	70	1.75/900	4.0	0.85	0.58	0.10	2500	140	8
MZx300	600-1800	300	8.3	90	2.15/1200	5.0	0.85	0.58	0.10	2500	140	13
MZx400	600-1800	400	9.5	90	2.00/1200	5.0	0.85	0.27	0.09	2500	140	13

MZx shows any type of MZ、MZC、MZA、MZK

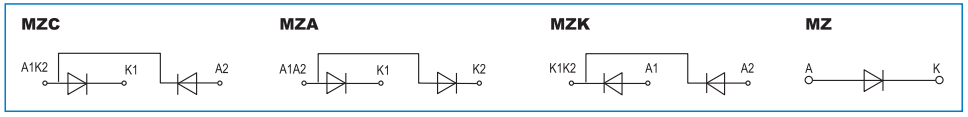

MUR200 Super Fast Recovery Diodes

Features

- Super fast recovery
- Max junction temperature up to 175℃
- Low forward voltage drop

Typical Applications

- Inverter Welding Power Supply
- Power Supply for Telecommunication
- Various Switching Power Supply

Notes

- V_{FM} are for 25℃, others are for T_j=T_{jm}, unless stated otherwise.

Type	$I_{F(AV)}$	V_{RRM}	I_{RRM}		I_{FRM}	I_{FSM}	V_{FM}	t_{rr}	$R_{th(j-c)}$	T_j	Outline
	A	V	μA		A	A	V	ns	°C/W	°C	
			125℃	25℃	20 kHz T_c 95℃	Per Leg 10ms	Per Leg 25℃ @ 100A	25℃			Fig.
MUR20020	200 (T_c = 130℃)	200	1000	150	200	800	1.0	50	0.45	-55 ~+175	40
MUR20040	200 (T_c = 100℃)	400	500	50	200	800	1.3	75	0.45	-55 ~+175	40

MUR

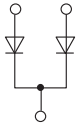

MUR(A)

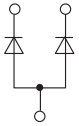

01

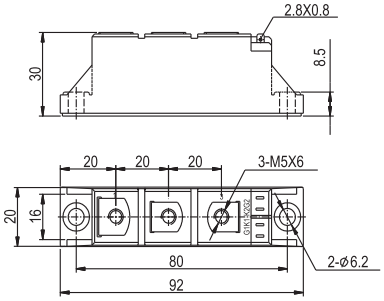

Terminal Torque	4.0N.m	Case Style	215F3
Mounting Torque	6.0N.m	Weight	105g

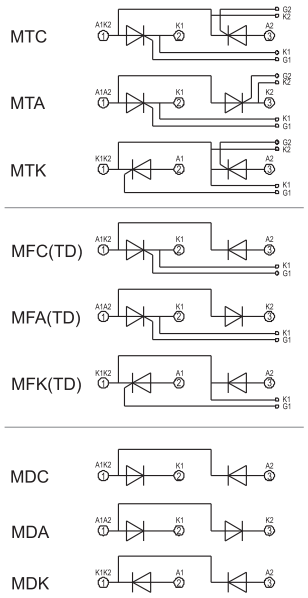

02

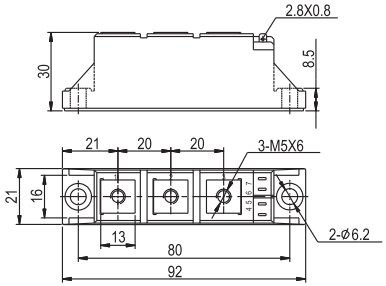

Terminal Torque	4.0N.m	Case Style	223F3
Mounting Torque	6.0N.m	Weight	160g

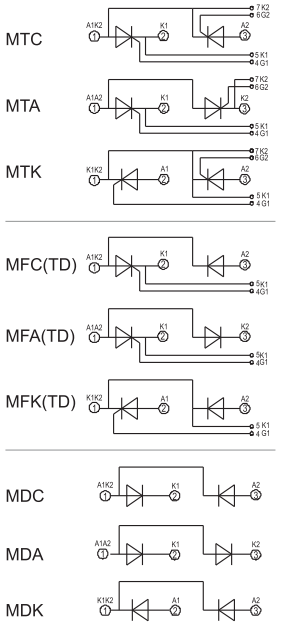

See P67 page table size tolerance

02B

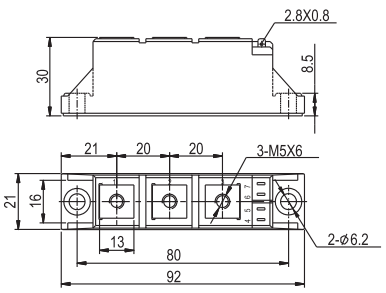

Terminal Torque	4.0N.m	Case Style	223F3B
Mounting Torque	6.0N.m	Weight	160g

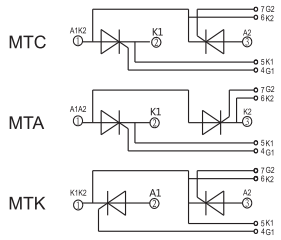

03

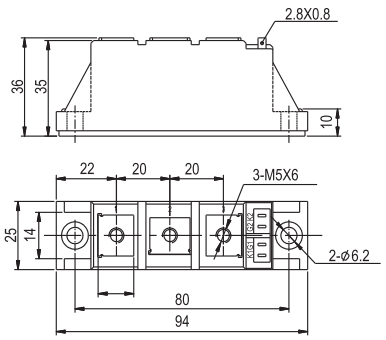

Terminal Torque	4.0N.m	Case Style	217F3
Mounting Torque	6.0N.m	Weight	150g

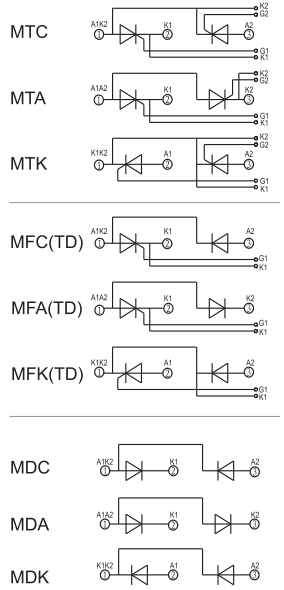

See P67 page table size tolerance

04

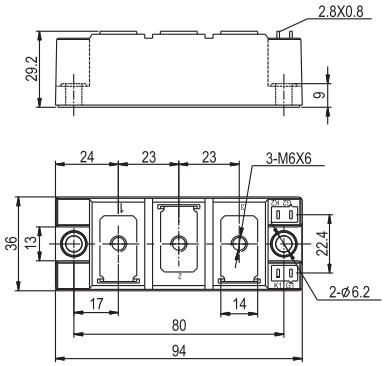

Terminal Torque	6.0N.m	Case Style	214F3
Mounting Torque	6.0N.m	Weight	305g

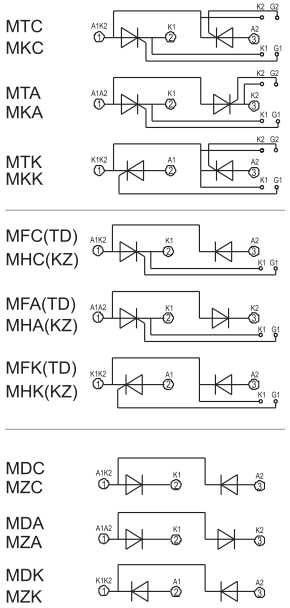

05

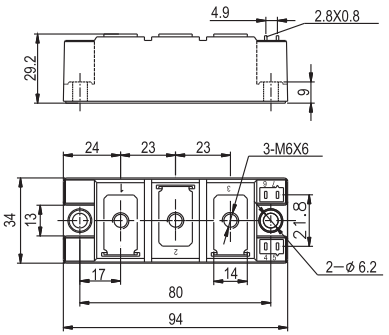

Terminal Torque	6.0N.m	Case Style	216F3
Mounting Torque	6.0N.m	Weight	285g

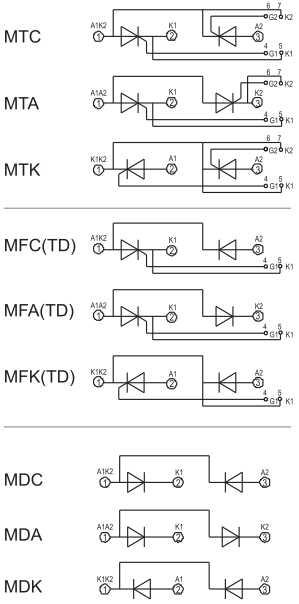

See P67 page table size tolerance

05B

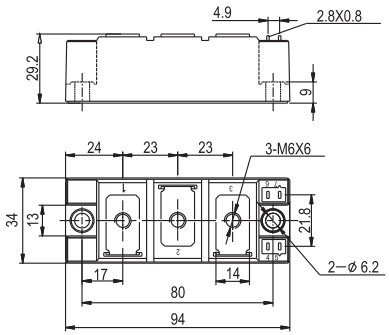

Terminal Torque	6.0N.m	Case Style	216F3B
Mounting Torque	6.0N.m	Weight	285g

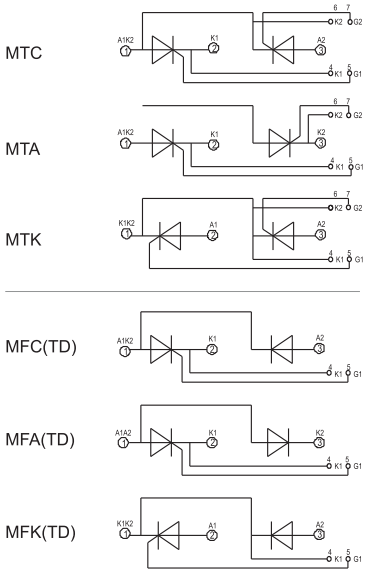

06

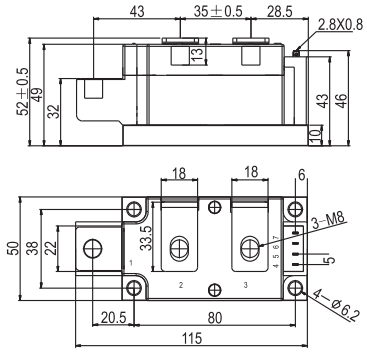

Terminal Torque	12.0N.m	Case Style	413F3D
Mounting Torque	6.0N.m	Weight	820g

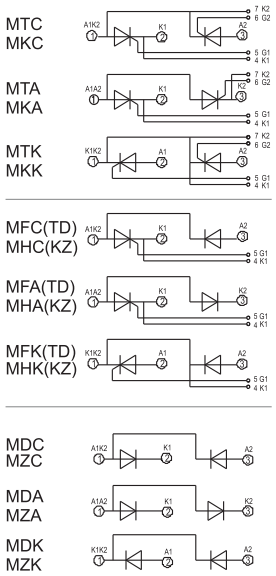

See P67 page table size tolerance

07

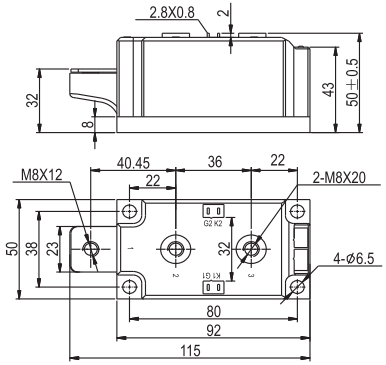

Terminal Torque	12.0N.m	Case Style	422F3
Mounting Torque	6.0N.m	Weight	820g

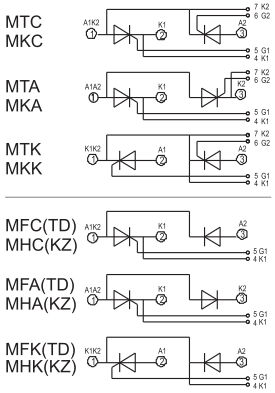

08

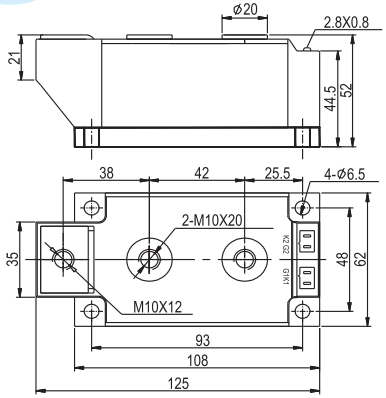

Terminal Torque	12.0N.m	Case Style	415F3
Mounting Torque	6.0N.m	Weight	1280g

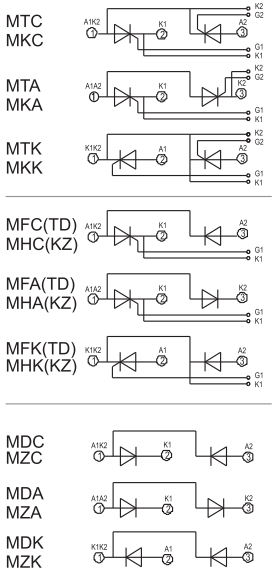

See P67 page table size tolerance

09

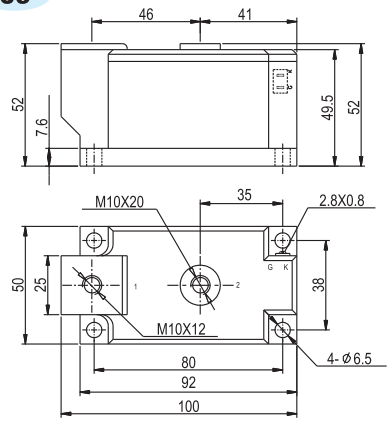

Terminal Torque	12.0N.m	Case Style	417F2
Mounting Torque	6.0N.m	Weight	820g

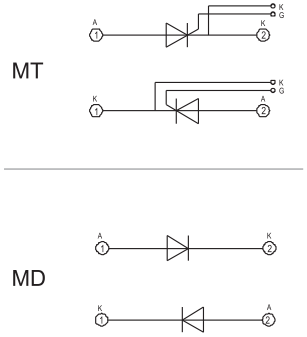

10

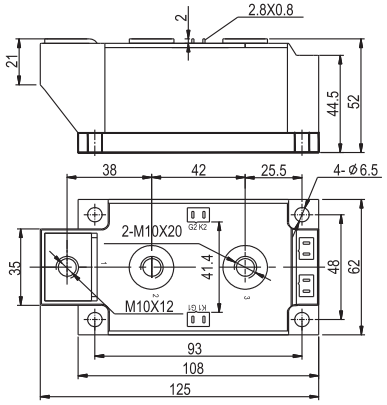

Terminal Torque	12.0N.m	Case Style	424F3
Mounting Torque	6.0N.m	Weight	1280g

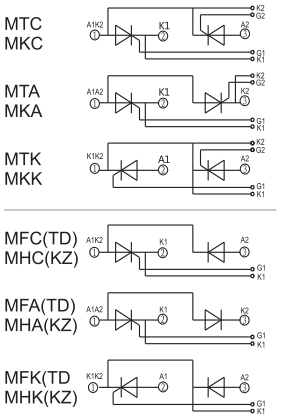

11

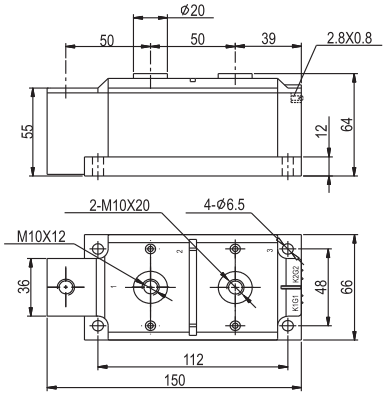

Terminal Torque	12.0N.m	Case Style	414F3
Mounting Torque	6.0N.m	Weight	1970g

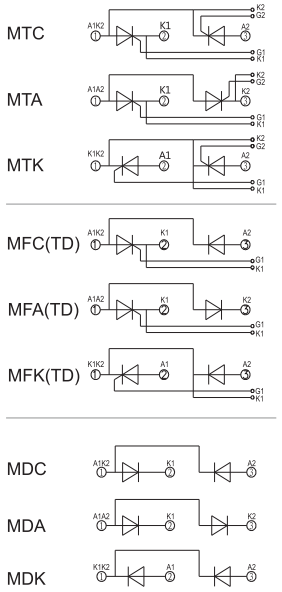

12

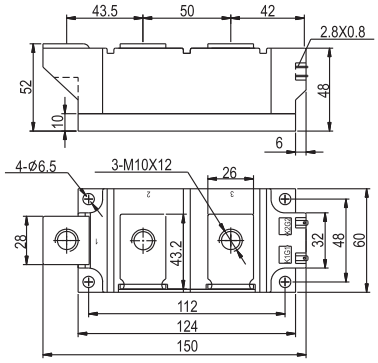

Terminal Torque	12.0N.m	Case Style	416F3
Mounting Torque	6.0N.m	Weight	1430g

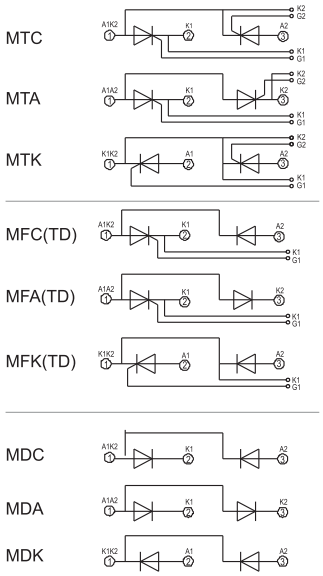

See P67 page table size tolerance

See P67 page table size tolerance

13

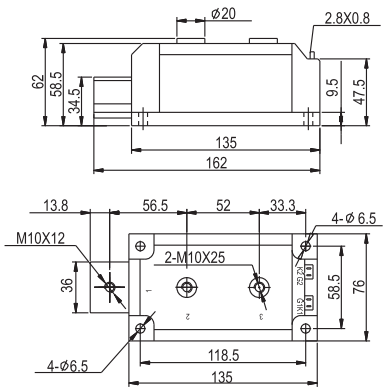

Terminal Torque	12.0N.m	Case Style	408F3
Mounting Torque	6.0N.m	Weight	2230g

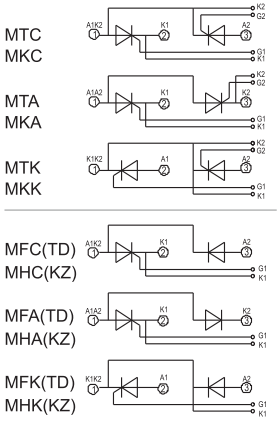

14

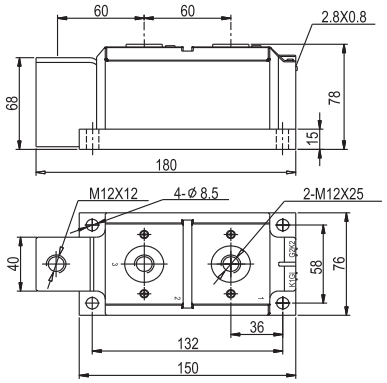

Terminal Torque	14.0N.m	Case Style	410F3
Mounting Torque	12.0N.m	Weight	3360g

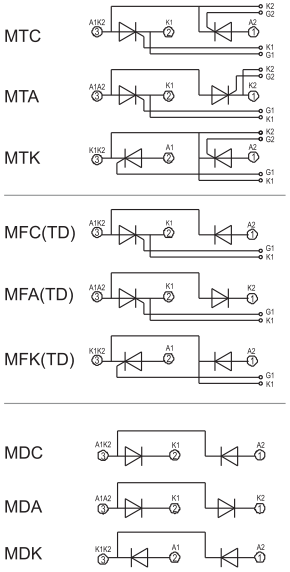

See P67 page table size tolerance

15

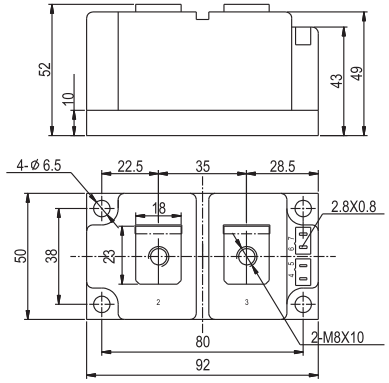

Terminal Torque	12.0N.m	Case Style	433F2
Mounting Torque	6.0N.m	Weight	765g

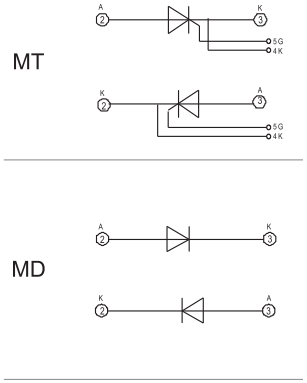

16

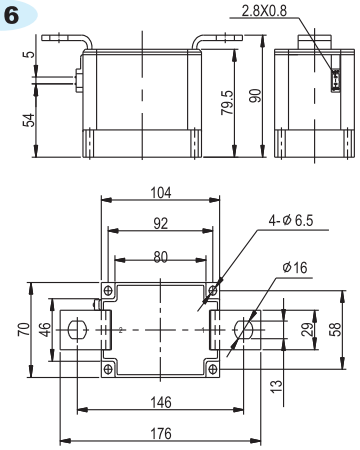

Terminal Torque	12.0N.m	Case Style	432F2
Mounting Torque	6.0N.m	Weight	2700g

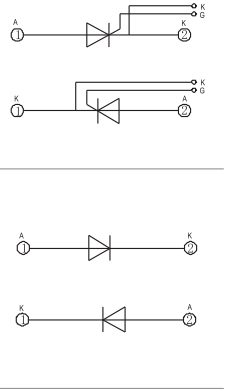

See P67 page table size tolerance

17

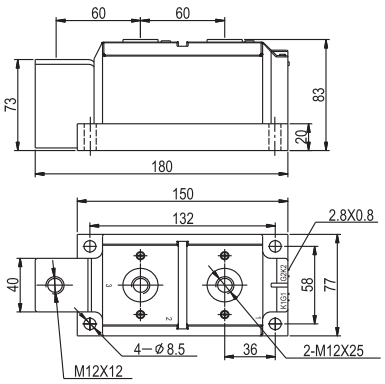

Terminal Torque	14.0N.m	Case Style	412F3
Mounting Torque	12.0N.m	Weight	3660g

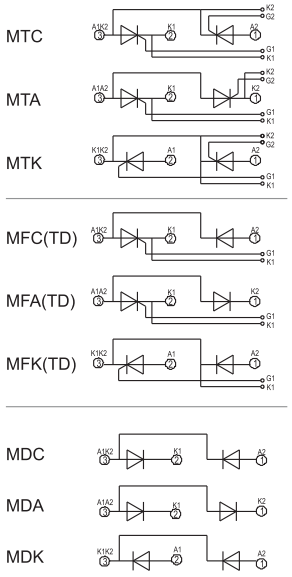

18

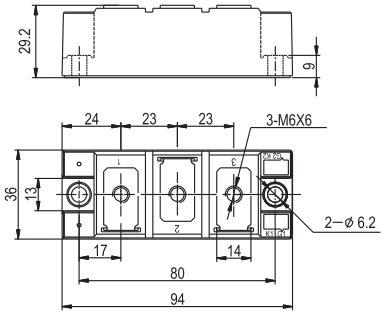

Terminal Torque	6.0N.m	Case Style	231F3
Mounting Torque	6.0N.m	Weight	320g

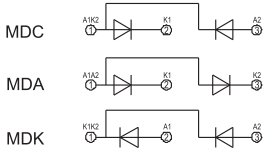

19

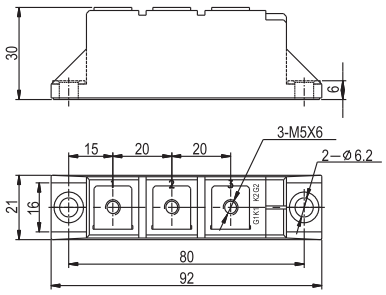

Terminal Torque	4.0N.m	Case Style	224H3
Mounting Torque	6.0N.m	Weight	165g

20

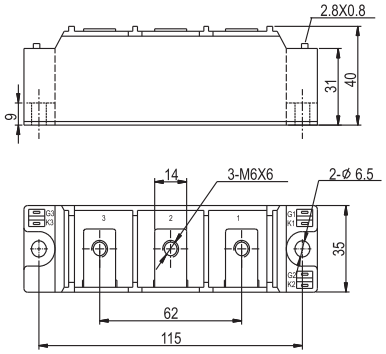

Terminal Torque	6.0N.m	Case Style	206F4
Mounting Torque	6.0N.m	Weight	365g

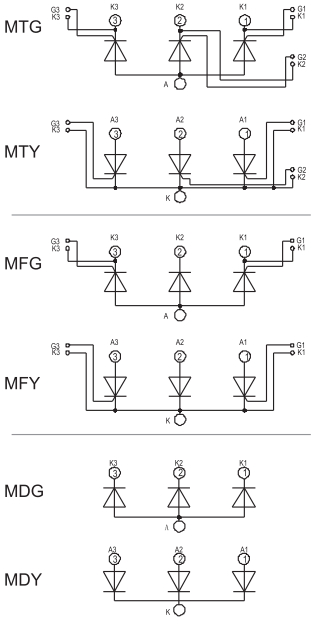

See P67 page table size tolerance

See P67 page table size tolerance

21

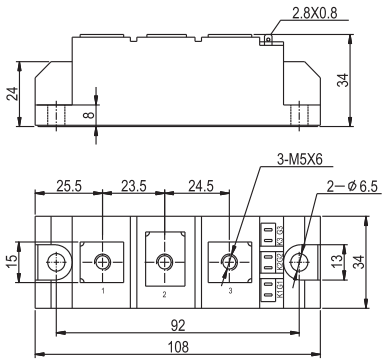

Terminal Torque	4.0N.m	Case Style	208F4
Mounting Torque	6.0N.m	Weight	205g

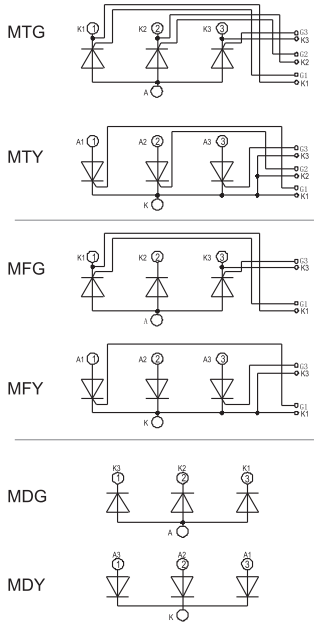

22

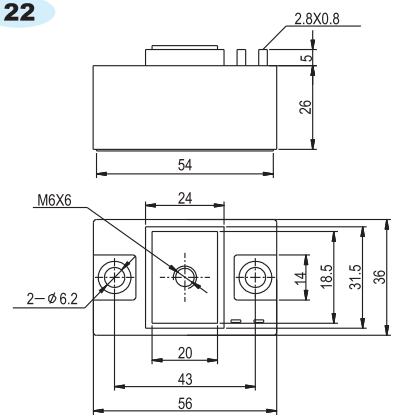

Terminal Torque	6.0N.m	Case Style	210F2
Mounting Torque	6.0N.m	Weight	225g

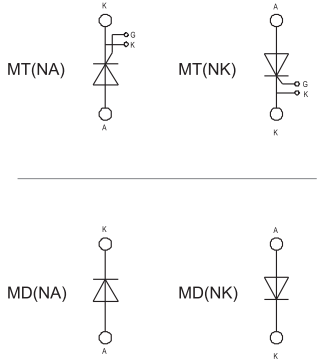

See P67 page table size tolerance

23

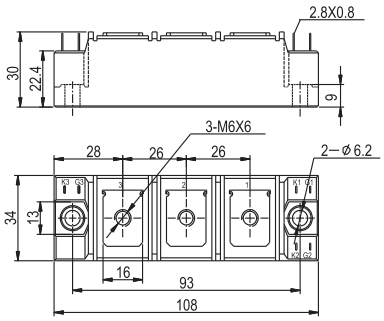

Terminal Torque	6.0N.m	Case Style	213F4
Mounting Torque	6.0N.m	Weight	365g

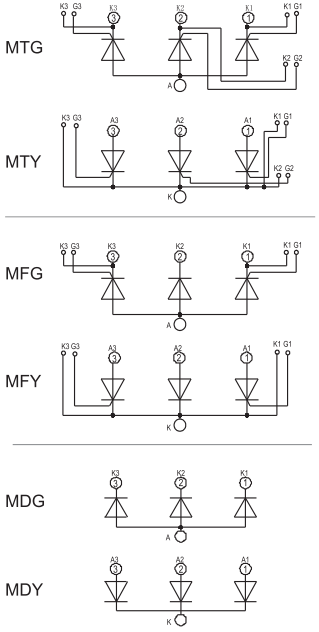

24

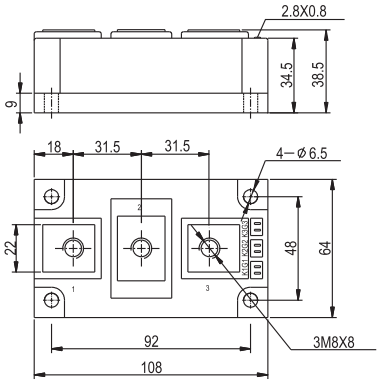

Terminal Torque	12.0N.m	Case Style	404F4
Mounting Torque	6.0N.m	Weight	640g

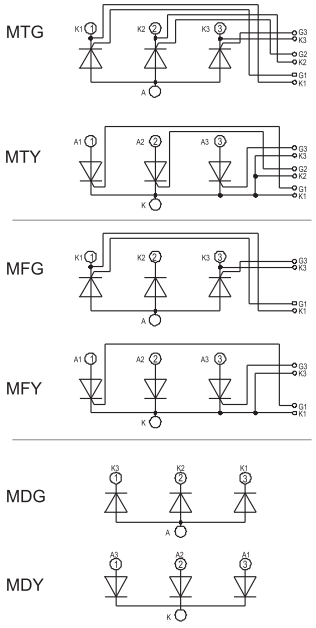

See P67 page table size tolerance

25

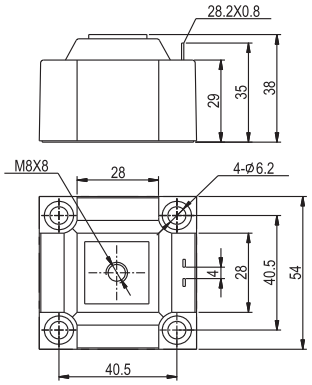

Terminal Torque	12.0N.m	Case Style	407F2
Mounting Torque	6.0N.m	Weight	305g

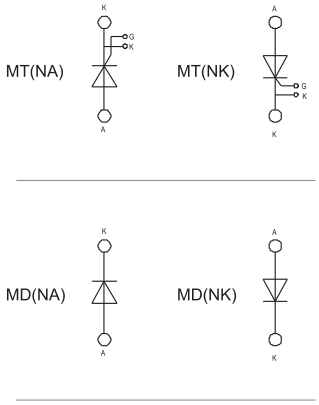

26

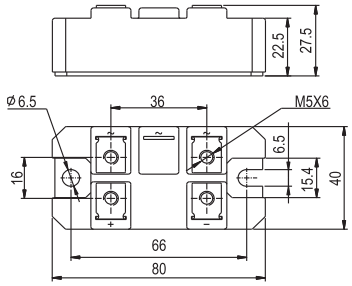

Terminal Torque	4.0N.m	Case Style	218H5
Mounting Torque	6.0N.m	Weight	180g

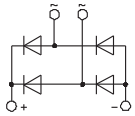

See P67 page table size tolerance

27

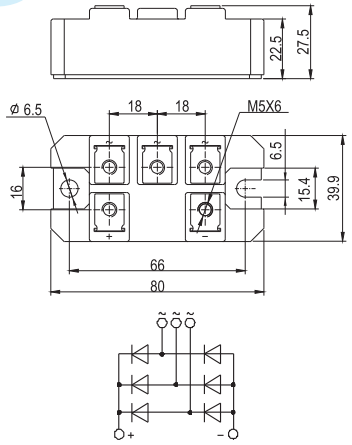

Terminal Torque	4.0N.m	Case Style	218H5
Mounting Torque	6.0N.m	Weight	195g

28

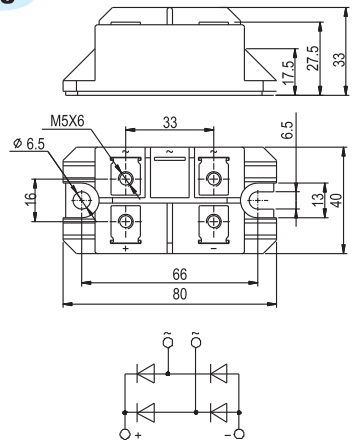

Terminal Torque	4.0N.m	Case Style	219H5
Mounting Torque	6.0N.m	Weight	190g

29

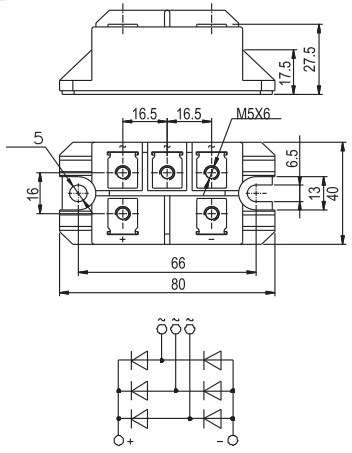

Terminal Torque	4.0N.m	Case Style	219H5
Mounting Torque	6.0N.m	Weight	215g

30

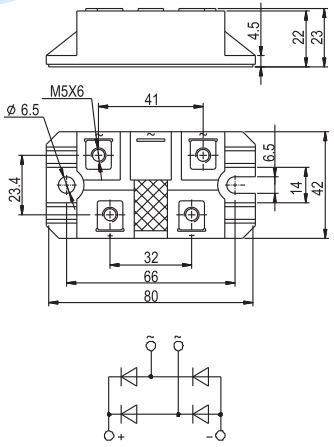

Terminal Torque	4.0N.m	Case Style	220H5
Mounting Torque	6.0N.m	Weight	185g

See P67 page table size tolerance

31

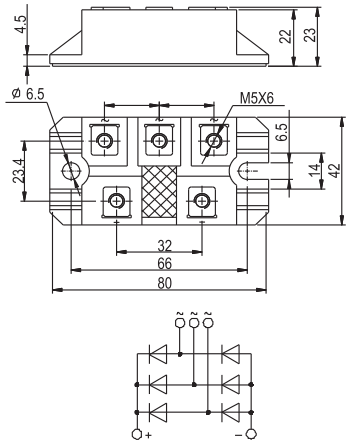

Terminal Torque	4.0N.m	Case Style	220H5
Mounting Torque	6.0N.m	Weight	130g

32

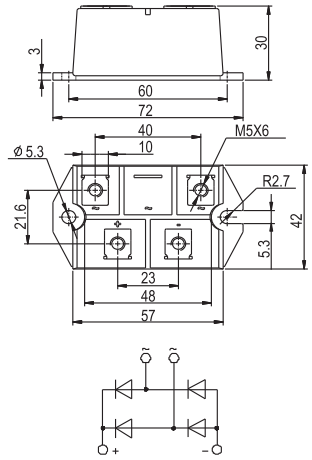

Terminal Torque	4.0N.m	Case Style	232H5
Mounting Torque	4.0N.m	Weight	130g

35

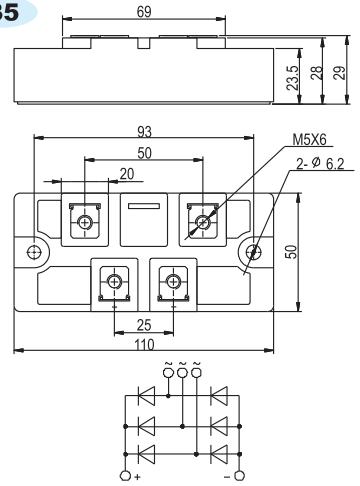

Terminal Torque	4.0N.m	Case Style	221H5
Mounting Torque	6.0N.m	Weight	285g

36

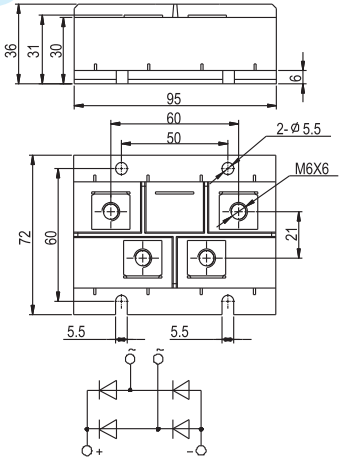

Terminal Torque	6.0N.m	Case Style	411H5
Mounting Torque	4.0N.m	Weight	400g

33

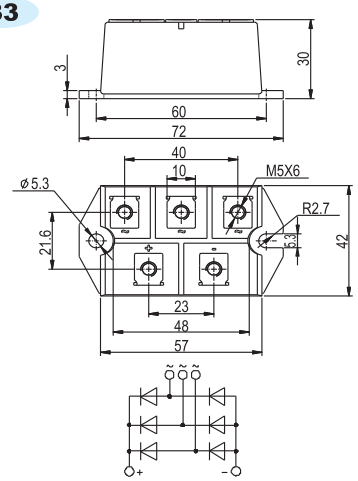

Terminal Torque	4.0N.m	Case Style	232H5
Mounting Torque	4.0N.m	Weight	145g

34

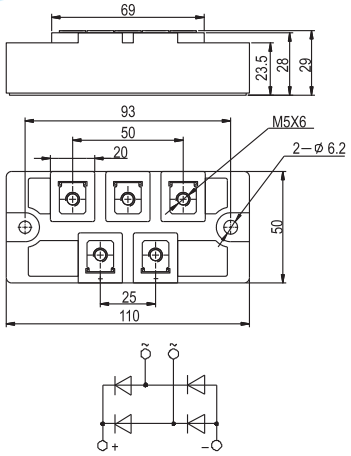

Terminal Torque	4.0N.m	Case Style	221H5
Mounting Torque	6.0N.m	Weight	280g

37

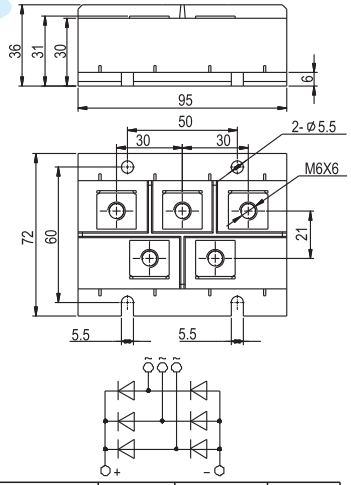

Terminal Torque	6.0N.m	Case Style	411H5
Mounting Torque	4.0N.m	Weight	425g

38

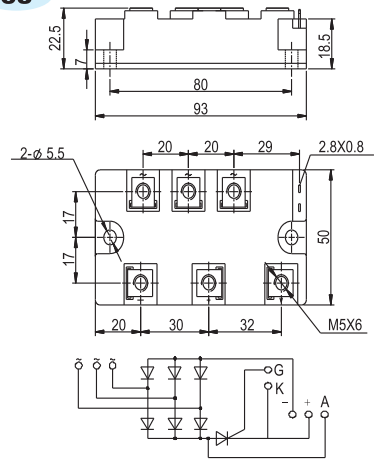

Terminal Torque	4.0N.m	Case Style	225H6
Mounting Torque	4.0N.m	Weight	35g

See P67 page table size tolerance

See P67 page table size tolerance

Outline

39

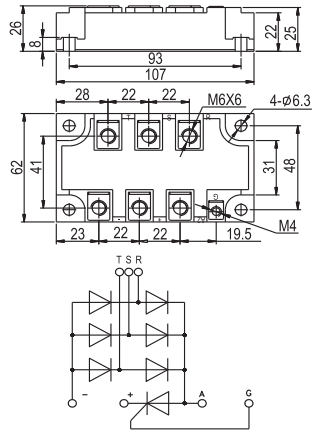

Terminal Torque	6.0N.m	Case Style	421H6
Mounting Torque	6.0N.m	Weight	430g

40

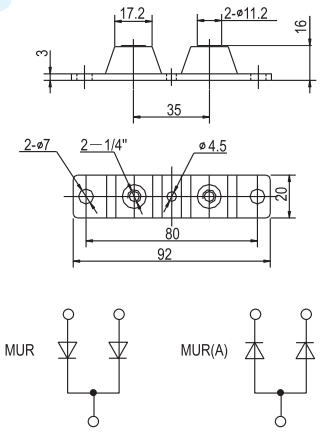

Terminal Torque	3.0N.m	Case Style	302H3
Mounting Torque	6.0N.m	Weight	80g

See P67 page table size tolerance

Attached list Tolerance of size table

Outline number	01–06B(P55–58)、26–46(P67–74)	07–24(P58–67)
Distance between mounting hole center of terminal	± 0.3	± 0.5
Height between base–plate bottom to terminal top	± 0.3	± 0.5
Distance between mounting hole center of base–plate	± 0.2	± 0.2
Outline dimension	+0.6 –0	+1.2 -0

1.Un–noted tolerances in compliance with GB/T1804–m
2.Dimension unit: mm

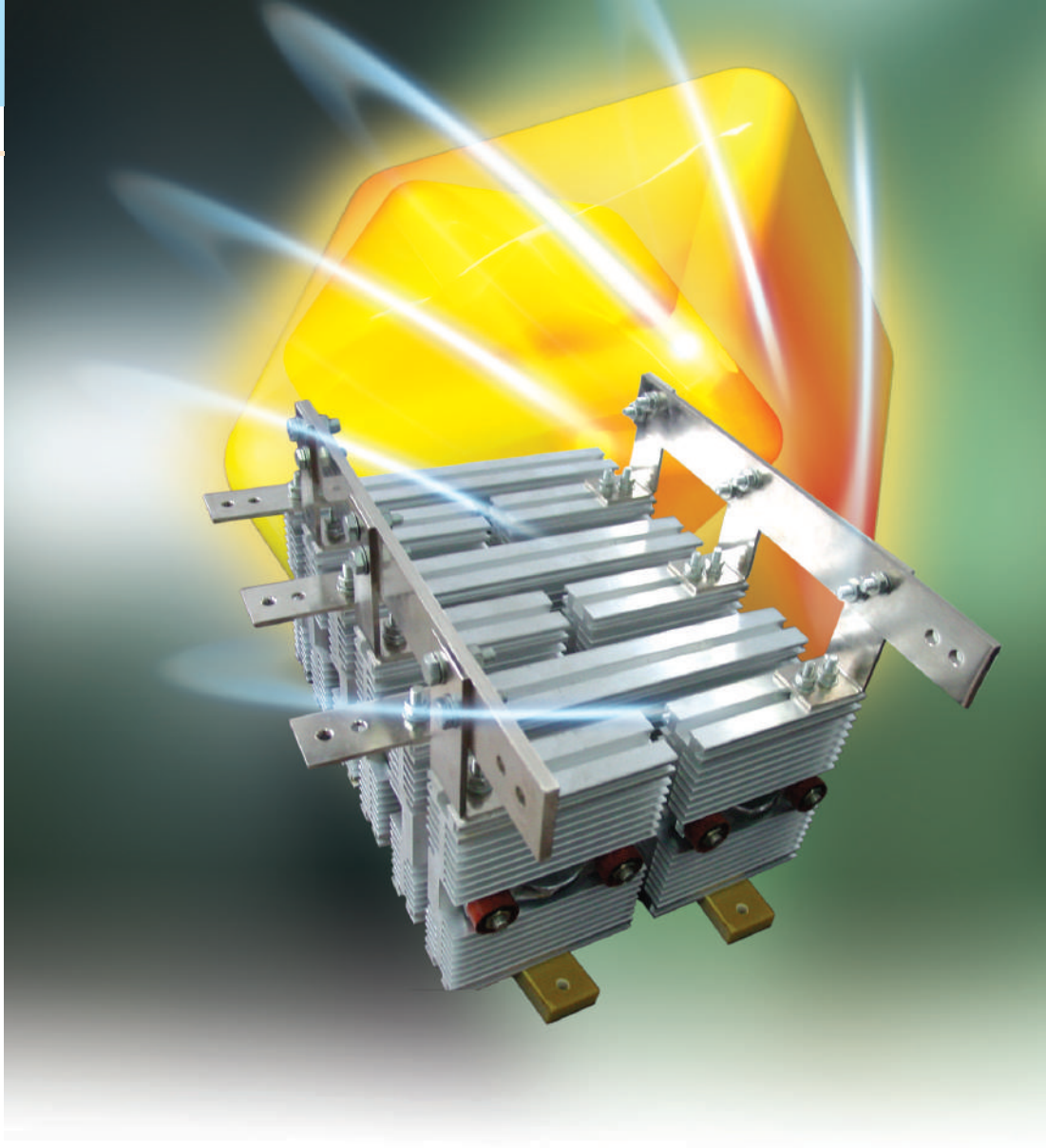

Power Semiconductor Assemblies

B6C - 100 - 800 FBX

- FBX: Code of heatsink — Fx:Air cooling Sx:Water cooling
- 800: Device voltage
- 100: Rated output current
- B6C: Code for circuit connection

Code for circuit connection

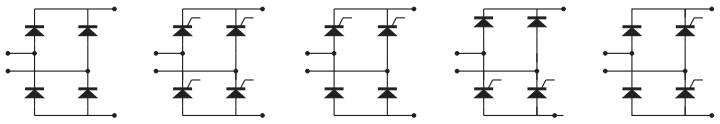

B2U B2C B2HK B2HA B2HZ

Single-phase full-control bridge B2C series, single-phase half-control bridge B2Hx series, single-phase rectifying bridge B2U series

Cooling method	Device type	Type $-I_d-V_{VN}$	Rated output current I_d(A)	Outline	Cooling condition	Device voltage (V)
Air cooling	Modules	B2x-xxx-xxxFA	40~160	Fig.1a	Wind speed ⩾6m/s Ambient temperature ⩽ 40℃	100~2000
		B2x-xxx-xxxFB	180~200	Fig.1b		
		B2x-xxx-xxxFC	250~400	Fig.3		
	Capsule types devices	B2x-xxx-xxxFD	300~800	Fig.9b		
		B2x-xxx-xxxFE	800~1200	Fig.10b		
		B2x-xxx-xxxFF	1200~2000	Fig.13b		
Water cooling	Capsule types devices	B2x-xxx-xxxSA(B/C/D/E)	100~2500	Fig.15-19	Flow⩾4L/Min Intake Water temperature⩽ 40℃	

Code for circuit connection

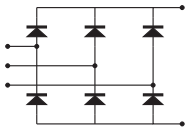

B6U

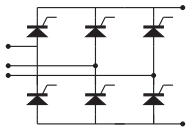

B6C

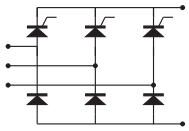

B6HK

Three-phase rectifying bridge B6U series, three-phase full-control bridge B6C series, three-phase half-control bridge B6HK series

Cooling method	Device type	Type $-I_d-V_{VN}$	Rated output current I_d(A)	Outline	Cooling condition	Device voltage (V)
Air cooling	Modules	B6x-xxx-xxxFA	80~200	∗Fig.1a	Wind speed ⩾6m/s Ambient temperature ⩽ 40℃	100~2000
		B6x-xxx-xxxFB	200~300	∗Fig.1b		
		B6x-xxx-xxxFC	300~500	∗Fig.3		
	Capsule types devices	B6x-xxx-xxxFD	400~1600	Fig.9a		
		B6x-xxx-xxxFE	1000~2000	Fig.10a		
		B6x-xxx-xxxFF	1500~3000	Fig.13a		
Water cooling	Capsule types devices	B6x-xxx-xxxSA(B/C/D/E)	300~4000	∗Fig.15-19	Flow⩾4L/Min Intake Water temperature⩽ 40℃	

∗ Busbar should be connected outer

Code for circuit connection

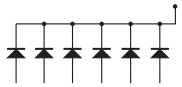

M6UK

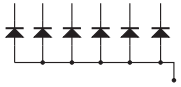

M6UA

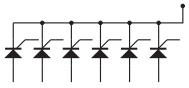

M6CK

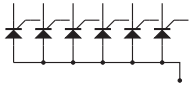

M6CA

Six-phase bridge M6x series

Cooling method	Device type	Type $-I_d-V_{VN}$	Rated output current I_d(A) double-star type with balance reactor	Rated output current I_d(A) double-star type without balance reactor	Outline	Cooling condition	Device voltage (V)
Air cooling	Modules	M6x-xxx-xxxFA	150~350	130~300	∗Fig.1a	Wind speed ⩾6m/s Ambient temperature ⩽ 40℃	100~2000
		M6x-xxx-xxxFB	450~600	350~500	∗Fig.1b		
		M6x-xxx-xxxFC	800~1200	600~800	∗Fig.3		
	Capsule types devices	M6x-xxx-xxxFD	1500~2500	1200~2000	Fig.9a		
		M6x-xxx-xxxFE	3000~4000	2500~3400	Fig.10a		
		M6x-xxx-xxxFF	5000~6000	4000~5000	Fig.13a		
		M6x-xxx-xxxFG	1500~1800	1000~1500	Fig.14		
Water cooling	Capsule types devices	∗M6x-xxx-xxxSA (B/C/D/E)	500~8000	400~5000	∗Fig.15-19	Flow⩾4L/Min Intake Water temperature⩽ 40℃	

∗ Busbar should be connected outer

Code for circuit connection

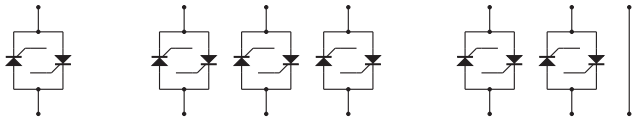

Single-phase AC switch, W1C series

Cooling method	Device type	Type -I_{RMS}-V_{VN}	Rated output current I_{RMS}(A)	Outline	Cooling condition	Device voltage (V)
Air cooling	Modules	W1C-xxx-xxxFA	90~150	Fig.2a	Wind speed ≥6m/s Ambient temperature ≤ 40℃	100~2000
		W1C-xxx-xxxFB	200~250	Fig.2b		
		W1C-xxx-xxxFC	300	Fig.4		
	Capsule types devices	W1C-xxx-xxxFD	400~800	Fig.5		
		W1C-xxx-xxxFE	1000~1200	Fig.6		
		W1C-xxx-xxxFF	1500~1800	Fig.11		
Water cooling	Capsule types devices	W1C-xxx-xxxSA(B/C/D/E)	600~2500	Fig.15-19	Flow≥4L/Min Intake Water temperature≤ 40℃	
		W1C-xxx-xxxSI(J/K)	800~1200	Fig.20~22		

Three-phase AC switch, W3C series

Cooling method	Device type	Type -I_{RMS}-V_{VN}	Rated output current I_{RMS}(A)	Outline	Cooling condition	Device voltage (V)
Air cooling	Modules	W3C-xxx-xxxFA	90~150	Fig.2a	Wind speed ≥6m/s Ambient temperature ≤ 40℃	100~2000
		W3C-xxx-xxxFB	200~250	Fig.2b		
		W3C-xxx-xxxFC	300	Fig.4		
	Capsule types devices	W3C-xxx-xxxFD	400~800	Fig.7		
		W3C-xxx-xxxFE	1000~1200	Fig.8		
		W3C-xxx-xxxFF	1500~1800	Fig.12		

Code for circuit connection

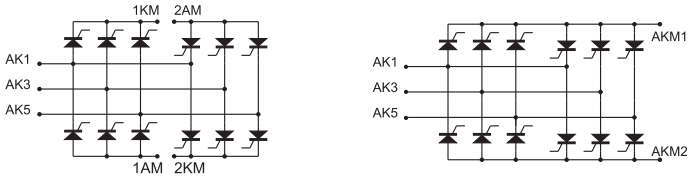

(B6C)2 (B6C)2I

Cooling method	Device type	Type -I_d-V_{VN}	Rated output current I_d(A)	Outline	Cooling condition	Device voltage (V)
Air cooling	Modules	(B6C)2x-xxx-xxxFA	80~150	*Fig.26a	Wind speed ≥6m/s Ambient temperature ≤ 40℃	100~2000
		(B6C)2x-xxx-xxxFB	200~260	*Fig.26b		
	Capsule types devices	(B6C)2x-xxx-xxxFE	800~1200	Fig.24		
		(B6C)2x-xxx-xxxFF	1500~2000	Fig.25		

* Busbar should be connected outer

Code for circuit connection

HVC HVU HVS (RSD)

TECHSEM provides various of thyristors/diodes/RSD high voltage assemblies to meet customers requirements. TECHSEM provides various power assemblies of high voltage, large power and assemblies with super high di/dt in pulse power field.

Cooling method	Type $-I_d-V_{VN}$	Device voltage (V)	* Rated output current (A)	Outline
Air cooling	HVx-xxx-xxxFx	3000~30000	50~500	Fig.23

* The rated current of power assembly depends on working condition.

Fig.1a,b

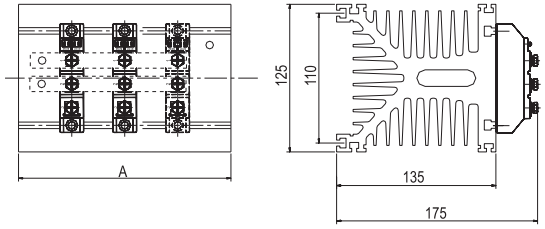

	Fig.1a	Fig.1b
A	180	260

Fig.2a,b

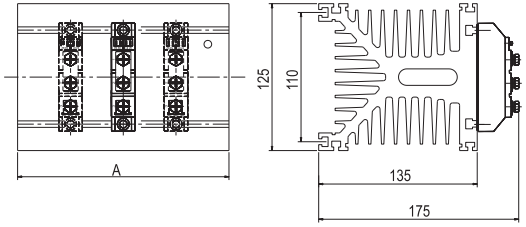

	Fig.2a	Fig.2b
A	180	260

Fig.3

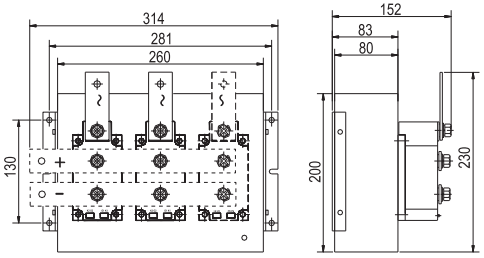

Fig.4

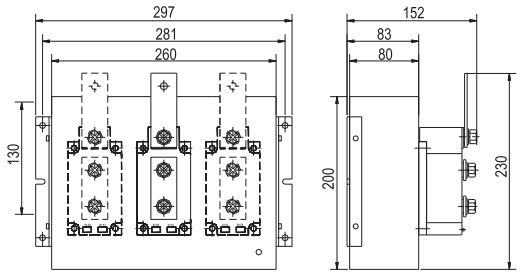

Fig.5

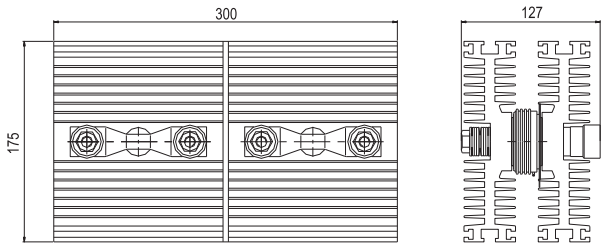

Fig.6

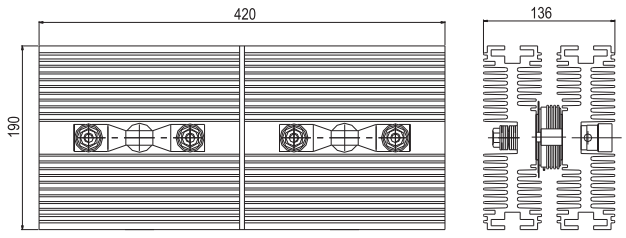

Fig.7

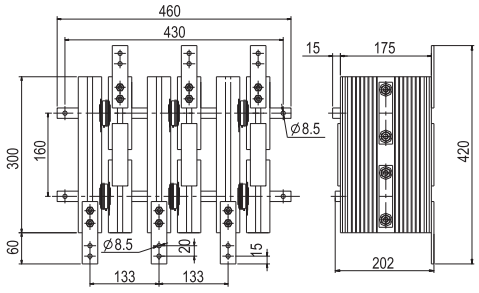

Fig.8

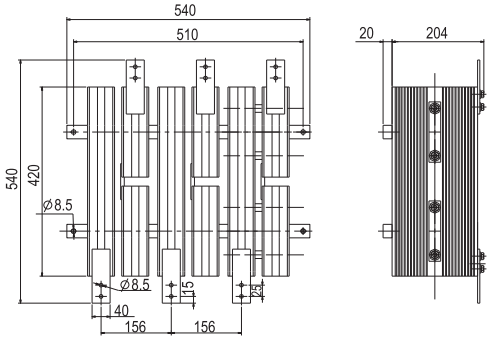

Fig.9a,b

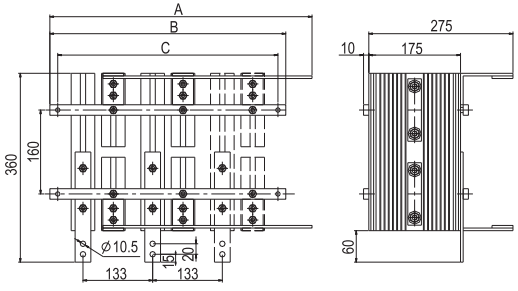

	A	B	C
Fig.9a	500	460	430
Fig.9b	370	330	300

Fig.10a,b

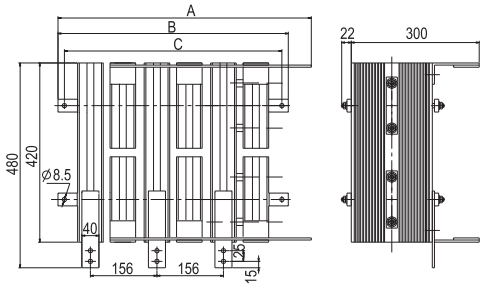

	A	B	C
Fig.10a	552	540	510
Fig.10b	395	384	354

Fig.11

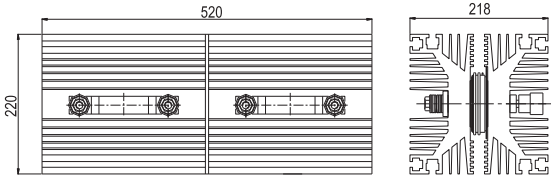

Fig.12

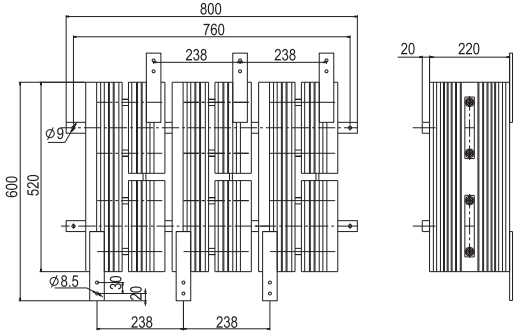

Fig.13a,b

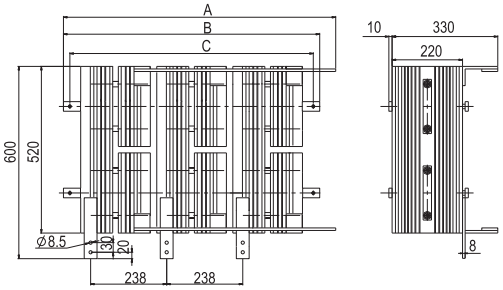

	A	B	C
Fig.13a	850	800	760
Fig.13b	613	563	523

Fig.14

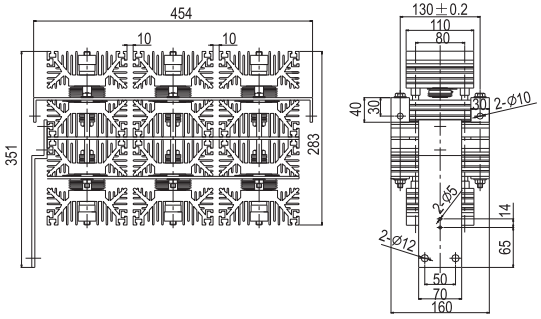

Fig.15

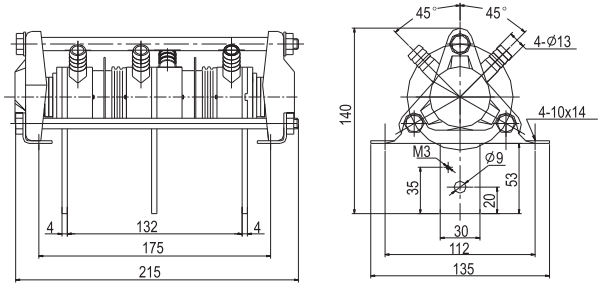

Fig.16

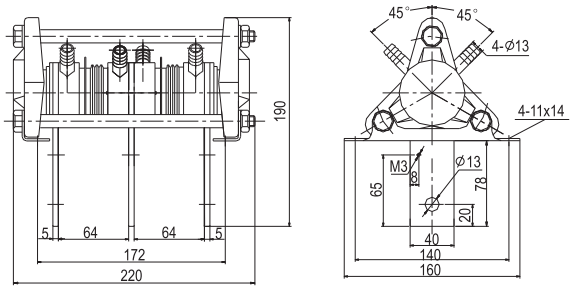

Fig.17

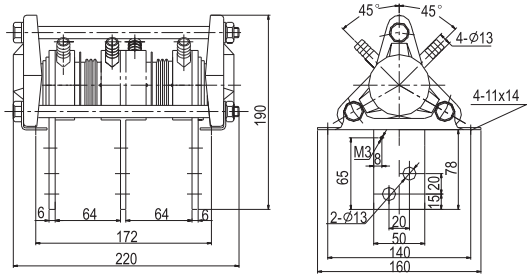

Fig.18

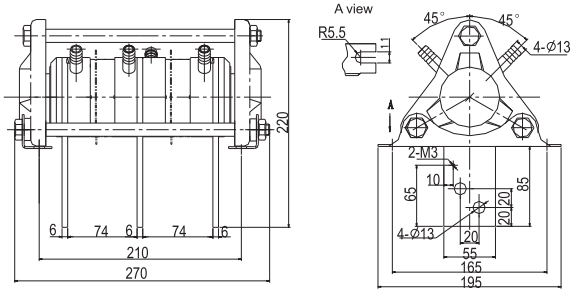

Fig.19

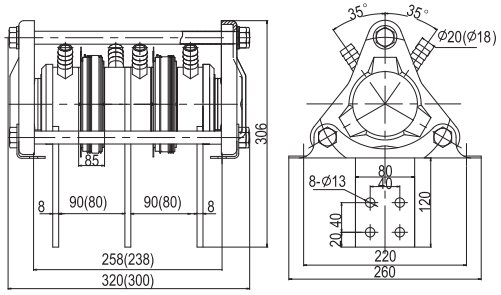

Fig.20

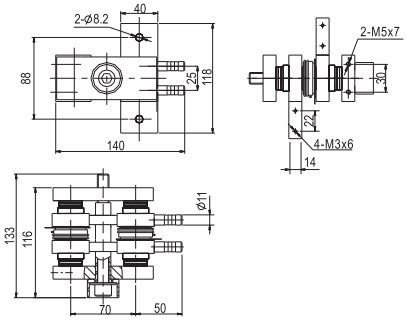

Fig.21

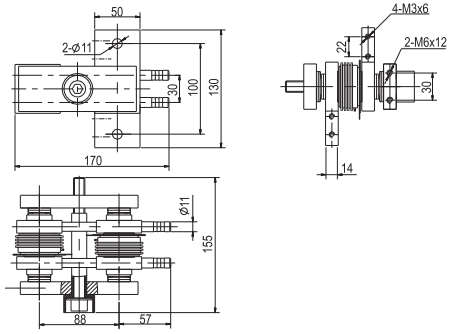

Fig.22

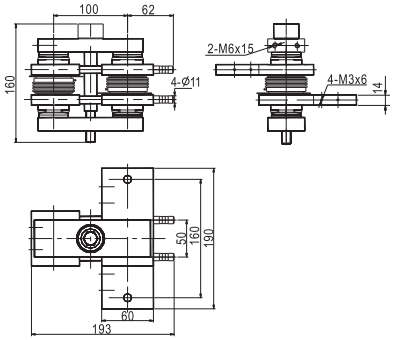

Fig.23

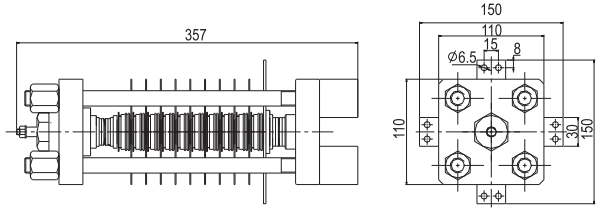

Fig.24

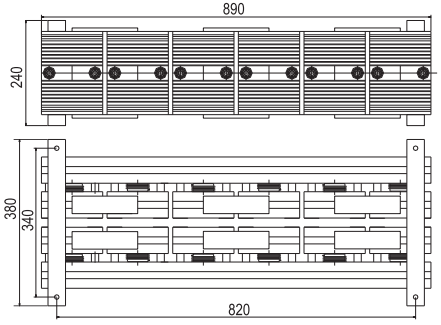

Fig.25

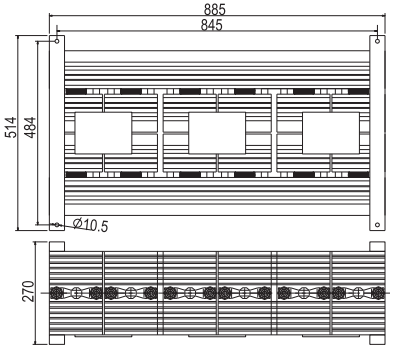

Fig.26a,b

	Fig.29a	Fig.29b
A	180	260

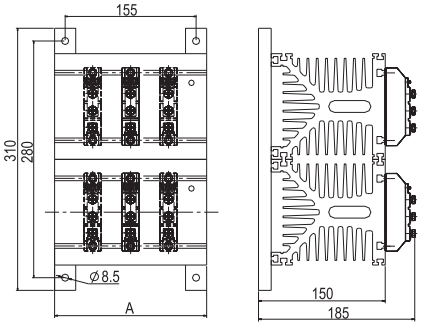

Features

- Thermal design is suitable for different application environment
- Air-cooled, water-cooled cooling way
- Can design according to customer's request

Cooling method	Type	Shape	Outline
Water cooling	SS11	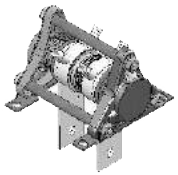	Fig.1
	SS12		
	SS13		Fig.3
	SS14		
	SS15		Fig.5
	SS16		Fig. 7
	SS17		Fig. 9
	SS11BL	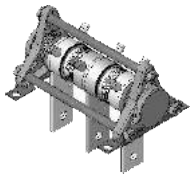	Fig.2
	SS12BL		
	SS13BL		Fig.4
	SS14BL		
	SS15BL		Fig.6
	SS16BL		Fig. 8
	SS17BL		Fig. 10
	RSS11	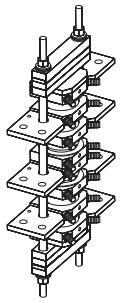	Fig.11
	RSS21		Fig.12
	RSS41		Fig.14
	RSS31	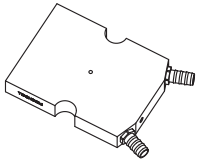	Fig.13

Cooling method	Type	Shape	Outline
Water cooling	RSS51	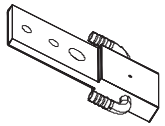	Fig.15
	RSS61	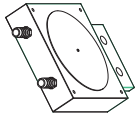	Fig. 16
	SS24 SS25	SS14 SS15series	Fig .17、19
	SS24BL SS25BL		Fig. 18、20
	DSS3	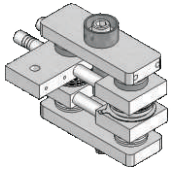	Fig. 21
	DSS5		
	DSS8		
Forced air cooling	SF12	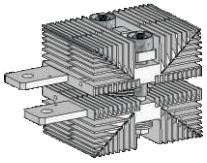	Fig . 22
	SF13		
	SF14		Fig . 23
	SF15		
	SF16		
	SF17		

Cooling method	Type	Shape	Outline
Forced air cooling	SF12BL	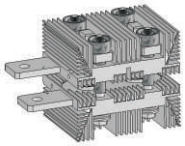	Fig . 24
	SF15BL		Fig . 25
	SF15CL	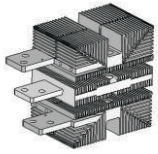	Fig . 26
	D		Fig . 27
	Z	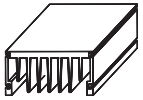	Fig . 28
	W	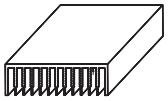	Fig . 29
	N	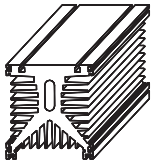	Fig . 30
	H		Fig . 31
	K	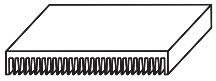	Fig . 32

Cooling method	Type	Shape	Outline
Forced air cooling	FD	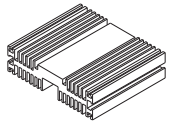	Fig . 33
	FK	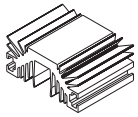	Fig . 34
	FE	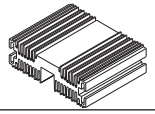	Fig . 35
	FL	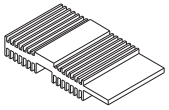	Fig . 36
	FI	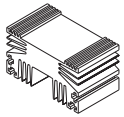	Fig . 37
	FF	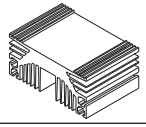	Fig . 38
	FG	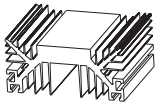	Fig . 39
	FAI	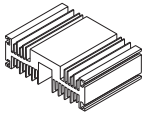	Fig.40
	FAE	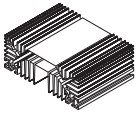	Fig.41

Cooling method	Type	Shape	Outline
Forced air cooling	FAD	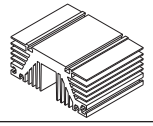	Fig.42
	FAJ	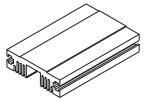	Fig.43
	FAK	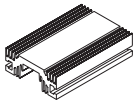	Fig.44
	FAQ	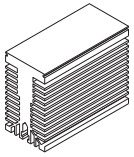	Fig.45
	FAN		Fig.46
	ZFxS	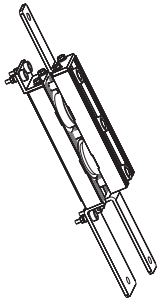	Fig.47
	ZFx		Fig.48

SS11、SS12 water cooling heatsink for single device (Fig.1)

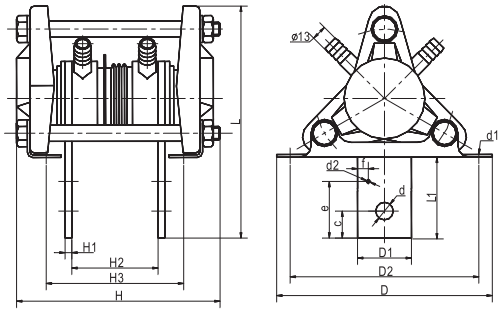

Type	Outline dimension			Busbar dimension			Mounting dimension								
	L	D	H	L1	H1	D1	D2	H2	H3	d	d1	d2	c	e	f
SS11	140	135	145	53	4	30	112	64	105	2-ϕ9	9×14	M3	20	35	6
SS12	190	160	152	78	5	40	140	64	105	2-ϕ13	11×14	M3	20	65	8

SS11BL、SS12BL water cooling heatsink for double devices (Fig.2)

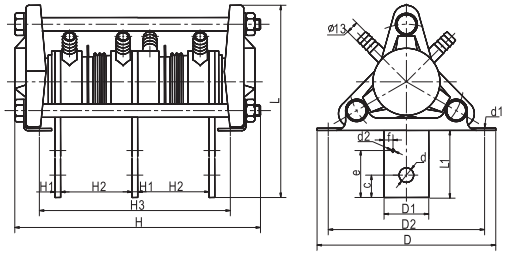

Type	Outline dimension			Busbar dimension			Mounting dimension								
	L	D	H	L1	H1	D1	D2	H2	H3	d	d1	d2	c	e	f
SS11BL	140	135	215	53	4	30	112	64	173	3-ϕ9	9×14	M3	20	35	6
SS12BL	190	160	220	78	5	40	140	64	174	3-ϕ13	11×14	M3	20	65	8

Type	SS11、SS11BL	SS12、SS12BL
Mesa diameter	Φ45 Φ23 Φ27	Φ55 Φ31 Φ36 Φ41
Suitable case	Φ19~Φ40	Φ34~Φ40
	Φ24 Φ28	Φ32 Φ37 Φ42
Mounting Force P(kN)	3.3~20	5.5~25
Thermal resistance (℃/W)	0.026	0.018
Applicable range	Suitable for device of 200~800A Water flow≥4L/Min	

SS13、SS14 water cooling heatsink for single device (Fig.3)

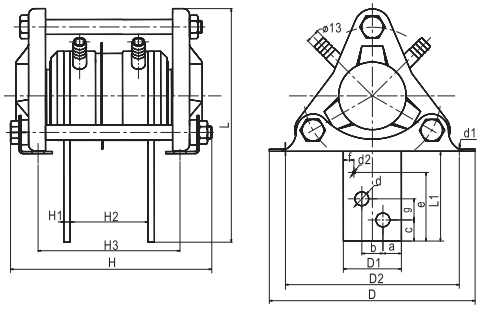

Type	Outline dimension			Busbar dimension			Mounting dimension											
	L	D	H	L1	H1	D1	D2	H2	H3	d	d1	d2	a	b	c	e	f	g
SS13	190	160	158	78	6	50	140	64	105	4-ϕ13	11x14	M3	15	20	15	65	8	20
SS14	220	195	188	85	6	55	165	74	130	4-ϕ13	11x14	M3	17.5	20	20	65	10	20

Water Cooling Heatsinks of SS Series

SS13BL、SS14BL water cooling heatsink for double devices (Fig.4)

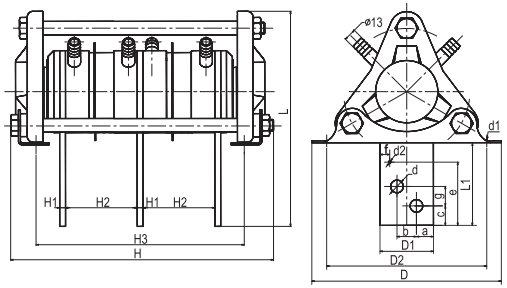

Type	Outline dimension			Busbar dimension			Mounting dimension											
	L	D	H	L1	H1	D1	D2	H2	H3	d	d1	d2	a	b	c	e	f	g
SS13BL	190	160	220	78	6	50	140	64	172	6-ϕ13	11x13	M3	15	20	15	65	8	20
SS14BL	220	195	268	85	6	55	165	74	210	6-ϕ13	11x13	M3	17.5	20	20	65	10	20

Type	Mesa diameter	Suitable case	Mounting Force P(kN)	Weight (kg)	Thermal resistance (℃/W)
SS13、SS13BL	Φ68	Φ40~Φ55	15～34	≥1.7	0.015
SS14、SS14BL	Φ84	Φ50~Φ73	18～47	≥2.2	0.013
Applicable range	Suitable for device of 500~2000A Water flow≥6L/Min 1500~2000A Water flow≥7L/Min				

SS15 water cooling heatsink for single device (Fig.5)

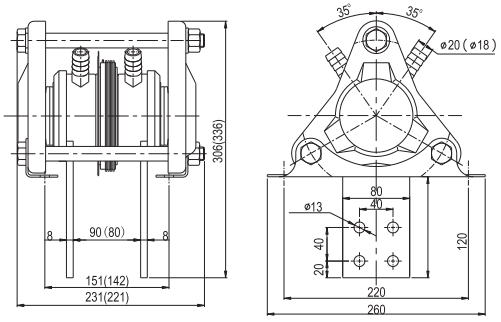

SS15BL water cooling heatsink for double devices (Fig.6)

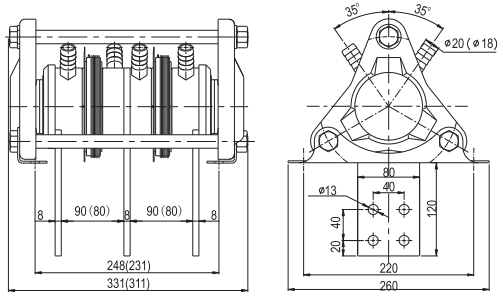

Type	Mesa diameter	Suitable case	Mounting Force P(kN)	Thermal resistance (℃/W)
SS15、SS15BL	Φ100	Φ73~Φ100	60 ~100	0.011
Applicable range	Suitable for device of 2000~3000A Water flow≥8L/Min			

SS16 water cooling heatsink for single device (Fig.7)

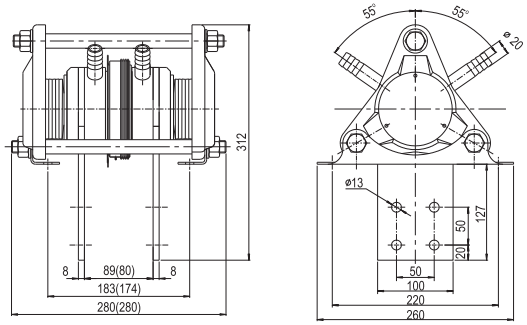

SS16BL water cooling heatsink for double devices (Fig.8)

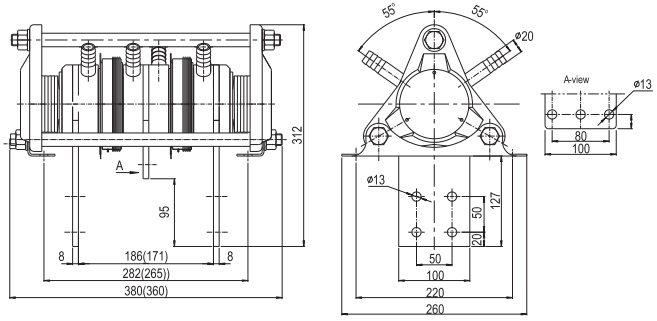

Type	Mesa diameter	Suitable case	Mounting Force P(kN)	Thermal resistance (°C/W)
SS16、SS16BL	Φ110	Φ100~Φ110	70 ~ 120	0.009
Applicable range	Suitable for device of 3000 ~ 4000A Water flow≥8L/Min			

SS17 (Fig.9)

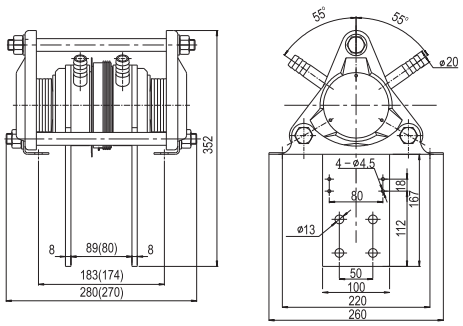

SS17BL (Fig.10)

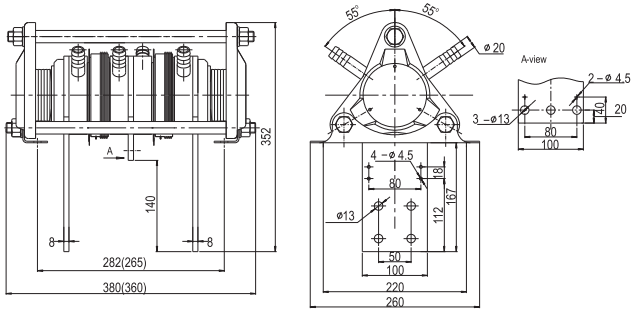

Type	Mesa diameter	Suitable case	Mounting Force P(kN)	Thermal resistance (°C/W)
SS17、SS17BL	Φ120	Φ110~Φ120	70～135	0.008
Applicable range	Suitable for device of 4000A-5000A Water flow≥8L/Min			

RSS11(Fig.11)

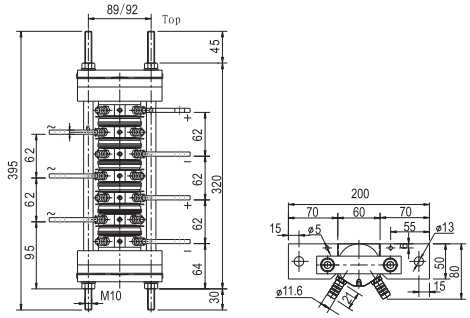

Type	Mesa diameter	Suitable case	Mounting Force P(kN)	Thermal resistance (°C/W)
RSS11	Φ50	Φ25~Φ50	10～26	0.018
Applicable range	Suitable for device of 200-1200A Water flow≥4L/Min			

RSS21(Fig.12)

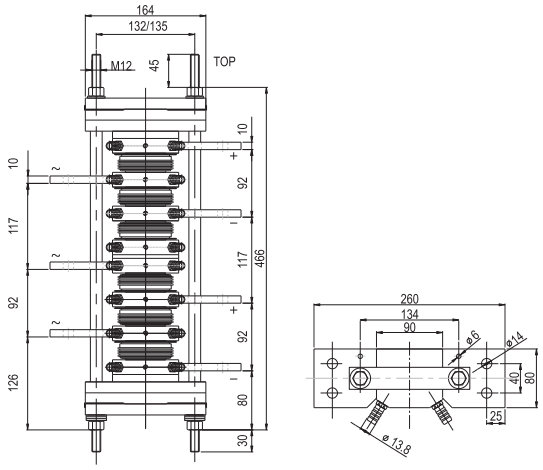

Type	Mesa diameter	Suitable case	Mounting Force P(kN)	Thermal resistance (°C/W)
RSS21	Φ80	Φ50~Φ80	26～47	0.013
Applicable range	Suitable for device of 500-3000A Water flow≥6L/Min			

RSS31(Fig.13)

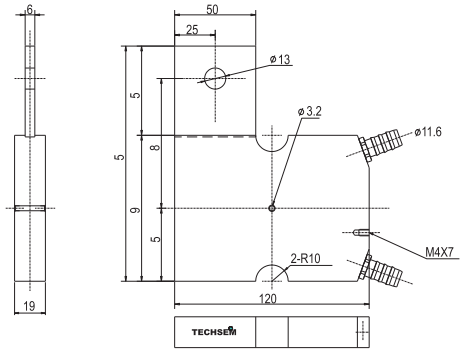

Type	Mesa diameter	Suitable case	Mounting Force P(kN)	Thermal resistance (°C/W)
RSS31	Φ70	Φ40~Φ70	15～34	0.015
Applicable range	Suitable for device of 500-2500A Water flow≥6L/Min			

RSS41(Fig.14)

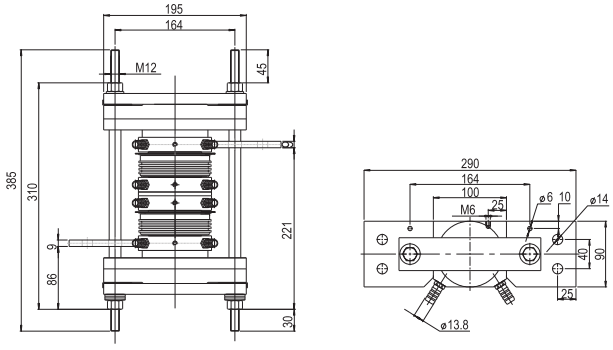

Type	Mesa diameter	Suitable case	Mounting Force P(kN)	Thermal resistance (°C/W)
RSS41	Φ90	Φ60~Φ84	30～85	0.01
Applicable range	Suitable for device of 1000-4000A Water flow≥7L/Min			

RSS51(Fig.15)

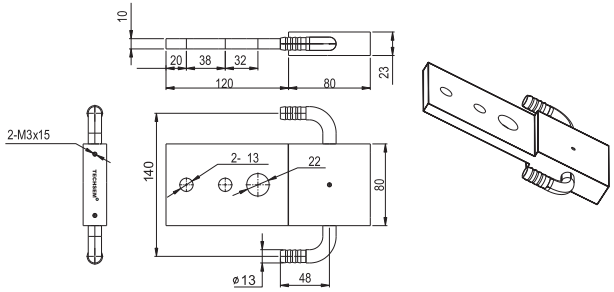

Type	Mesa diameter	Suitable case	Mounting Force P(kN)	Thermal resistance (°C/W)
RSS51	Φ80	Φ50~Φ80	26～47	0.012
Applicable range	Suitable for device of 1000-3500A water flow≥8L/Min			

RSS61(Fig.16)

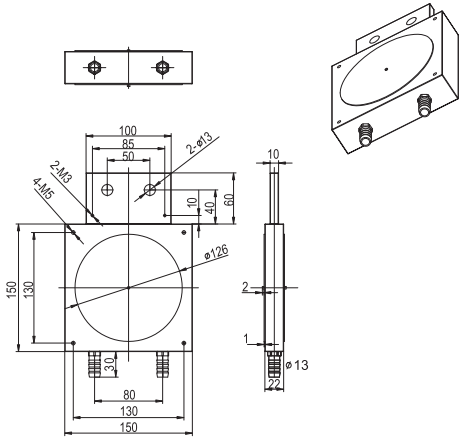

Type	Mesa diameter	Suitable case	Mounting Force P(kN)	Thermal resistance (°C/W)
RSS61	Φ126	Φ90~Φ120	70～120	0.007
Applicable range	Suitable for device of 2000-5000A water flow≥8L/Min			

SS24, SS25 respectively is improved type of SS14, SS15 series

Features

- Respectively compatible with SS14, SS15 series of water-cooling heat sink
- Special design of water-cooling channel inside heat sink
- Super low thermal resistance, high capability of heat-cooling
- Kinds of mounting structure

Typical Applications

- Heat-cooling for super high-power disc device
- High-power commutating power supply
- High-power induction power supply

Type	Mesa diameter	Suitable case	Mounting Force P(kN)	Water flow L/Min	Thermal resistance (°C/W)
SS24 series	Φ84	Mesa diameter Φ50~Φ84 diodes and thyristors	18 ~ 70	⩾6	0.010
SS25 series	Φ100	Mesa diameter Φ70~Φ100 diodes and thyristors	60 ~ 100	⩾8	0.008

Outlines of SS2x series are completely compatible with SS14 and SS15 series. (Fig.17~20)

SS24 (Fig.17)

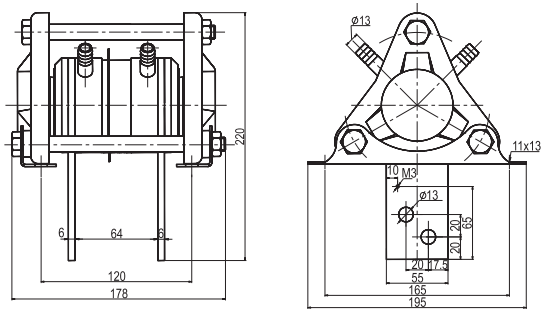

SS24BL (Fig.18)

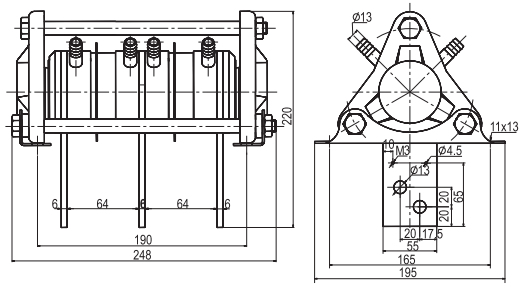

SS25 (Fig.19)

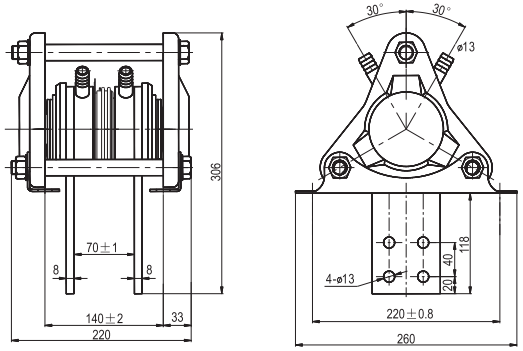

SS25BL (Fig.20)

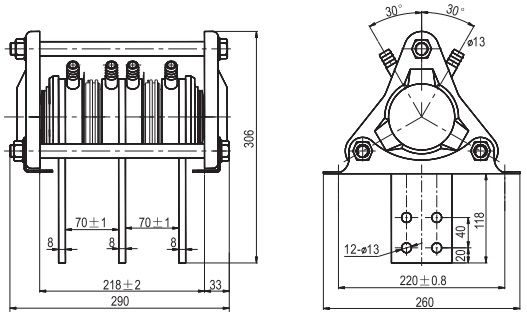

DSS3、DSS5、DSS8 Water Cooling Heatsinks (Fig.21)

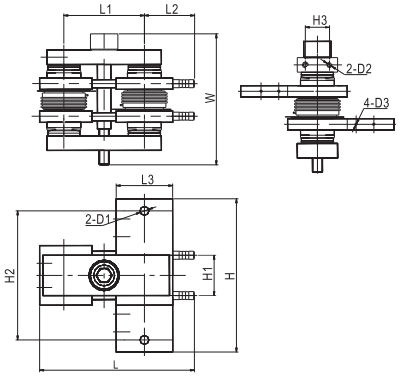

Type	Outline dimension						Moutline dimension					
	L	L1	L2	L3	H	H1	H2	H3	D1	D2	D3	W_{max}
DSS3	140	70	50	40	118	25	88	25	Φ8.2	M5×7	M3×6	135
DSS5	170	88	57	50	130	30	100	30	Φ11	M6×15	M3×6	155
DSS8	193	100	62	60	190	50	160	30	Φ11	M6×10	M3×6	160

Type	Max mesa	Suitable casa	Thermal resistance (℃/W)	Applicable range
DSS3	40X40	Φ19~Φ34	0.030	Suitable for device of 300~800A Water flow≥4L/Min
DSS5	50X50	Φ34~Φ40	0.026	
DSS8	60X60	Φ34~Φ47	0.018	

SF12、SF13 Air cooling Heatsink for single device (Fig.22)

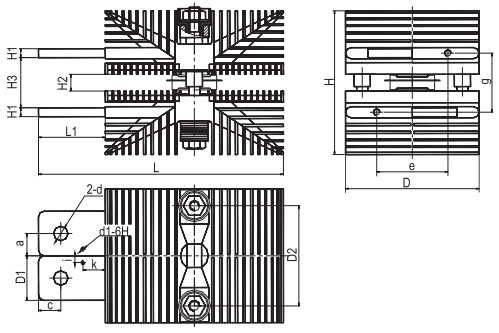

Type	Outline dimension			Busbar dimension				Moutline dimension									
	L	D	H	L1	D1	H1	D2	H2	H3	d	d1	a	c	e	g	i	k
SF12	200	110	125	60	40	8	80	15	22	Φ13	M3	20	20	55	30	6	20
SF13	220	120	130	60	40	8	90	15	45	Φ13	M3	20	20	64	53	6	20

Type	SF12			SF13		
Mesa diameter	Φ65	Φ23	Φ27	Φ65	Φ27	Φ31
Suitable case	Φ19~Φ40			Φ34~Φ40		
	Φ24	Φ28		Φ28	Φ32	
Mounting force P(kN)	3.3~20			5.5~25		
Thermal resistance (℃/W)	0.090			0.071		
Applicable range	Suitable for device of 200~800A Wind speed≥4m/s					

SF14、SF15、SF16、SF17 Air cooling Heatsink for single device (Fig.23)

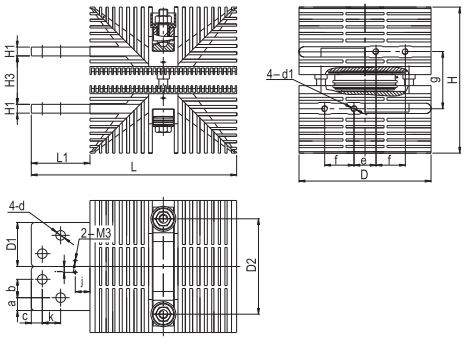

Type	Outline dimension			Busbar dimension			Moutline dimension													
	L	D	H	L1	D1	H1	D2	H2	H3	d	d1	a	b	c	e	f	g	i	j	k
SF14	250	140	145	80	50	10	105	15	45	Φ11	M6	12.5	25	12.5	40	35	55	8	20	25
SF15	280	140	165	80	60	12	105	15	50	Φ13	M8	17.5	25	15	40	35	62	8	20	25
SF16	280	180	200	80	60	12	130	15	66	Φ13	M8	17.5	25	15	30	40	78	8	20	25
SF17	300	200	215	80	60	12	140	15	73	Φ13	M8	17.5	25	15	40	40	85	8	24	25

Type	SF14	SF15	SF16	SF17
Mesa diameter	Φ82 Φ31 Φ36	Φ82 Φ31 Φ36 Φ41	Φ82	Φ120
Suitable case	Φ34~Φ45	Φ40~Φ47	Φ45~Φ65	Φ40~Φ73
	Φ32 Φ37	Φ32 Φ37 Φ42	–	–
Mounting Force P(kN)	5.5~30	10~34	15~40	15~47
Thermal resistance (℃/W)	0.056	0.048	0.037	0.030
Applicable range	Suitable for device of 600~2000A Wind speed≥4m/s for over 1500A Wind speed≥6m/s			

SF12BL Air cooling Heatsink for double devices (Fig.24)

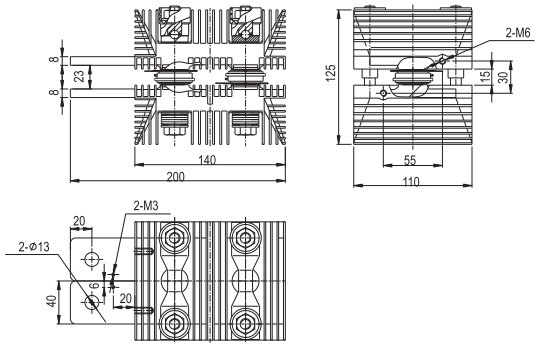

Mesa diameter	Suitable casa	Mounting Force P(kN)	Thermal resistance (℃/W)	Applicable range
Φ27	Φ19~Φ25	3.3～20	0.050	Suitable for device of 200A Wind speed≥4m/s Assembly for anti-parallel connection

SF15BL Air cooling Heatsink for double devices (Fig.25)

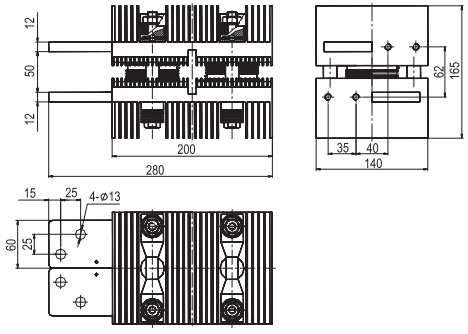

Mesa diameter	Suitable casa	Mounting Force P(kN)	Thermal resistance (℃/W)	Applicable range
Φ82	Φ34~Φ45	10 ~ 34	0.090	Suitable for device of 300~ 500A Wind speed≥4m/s Assembly for anti-parallel connection

SF15CL Air cooling Heatsink for double devices (Fig.26)

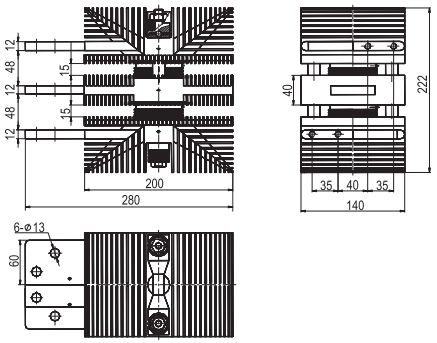

Mesa diameter	Suitable casa	Mounting Force P(kN)	Thermal resistance (℃/W)	Applicable range
Φ82	Φ34~Φ45	10 ~ 34	0.090	Suitable for device of 300~500A Wind speed≥6m/s Assembly for anti-parallel connection

D Series (Fig.27)

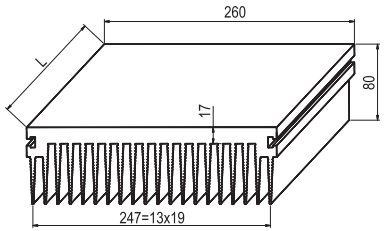

Suitable device	Suitable case (cm^2)	Perimeter (mm)	Weight (kg/m)
Module	93.3	2540	22

Z Series (Fig.28)

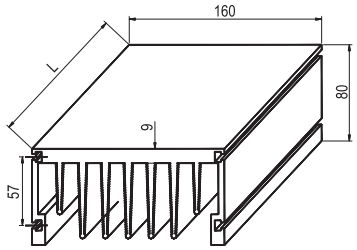

Suitable device	Suitable case (cm^2)	Perimeter (mm)	Weight (kg/m)
Module	44.45	1652	12

W Series (Fig.29)

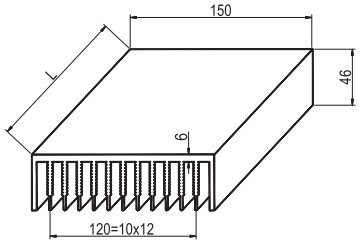

Suitable device	Suitable case (cm^2)	Perimeter (mm)	Weight (kg/m)
Module	29.3	1924	7.95

N Series (Fig.30)

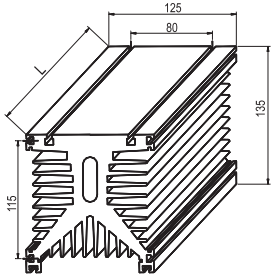

Suitable device	Suitable case (cm^2)	Perimeter (mm)	Weight (kg/m)
Module	77.78	2302	16

H Series (Fig.31)

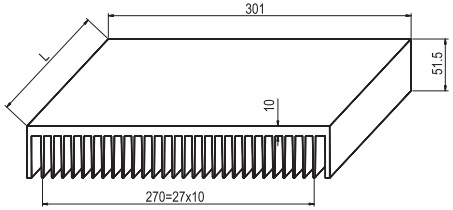

Suitable device	Suitable case (cm^2)	Perimeter (mm)	Weight (kg/m)
Module	59.3	3080	16

K Series (Fig.32)

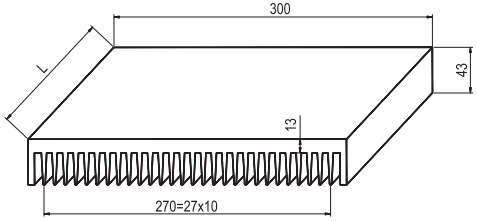

Suitable device	Suitable case (cm^2)	Perimeter (mm)	Weight (kg/m)
Module	66.7	1205	18.8

FD (Fig.33)

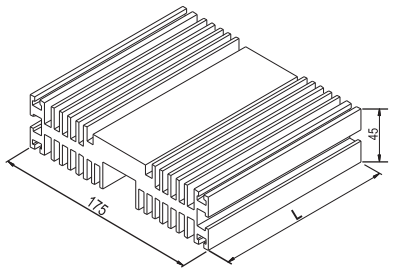

Type	Suitable case	Secyion area (cm^2)	Perimeter (mm)	Weight (kg/m)	Applicable range
FD	Φ34~Φ50	35.9	1513	9.7	Suitable for device of 600-1200A Wind speed≥4m/s Assembiy for anti-parallel connection&series connection

FK (Fig.34

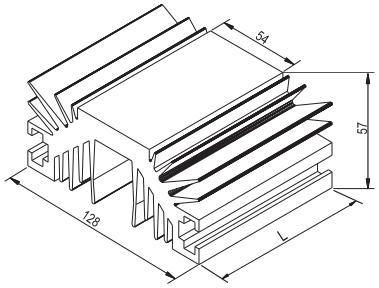

Type	Suitable case	Secyion area (cm^2)	Perimeter (mm)	Weight (kg/m)	Applicable range
FK	Φ34~Φ50	31	1190	8.4	Suitable for device of 600-1200A Wind speed≥4m/s Assembiy for anti-parallel connection&series connection

FE (Fig.35)

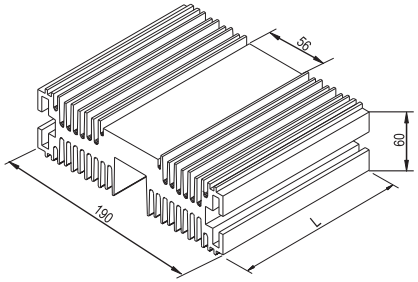

Type	Suitable case	Secyion area (cm^2)	Perimeter (mm)	Weight (kg/m)	Applicable range
FE	Φ34~Φ55	62.13	2170	14.4	Suitable for device of 600-1200A Wind speed≥4m/s Assembiy for anti-parallel connection&series connection

FL (Fig.36)

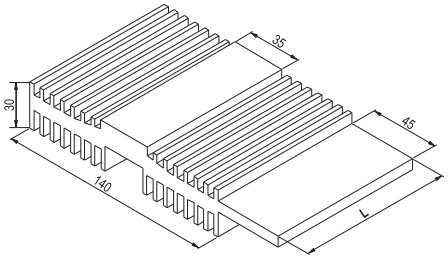

Type	Suitable case	Secyion area (cm^2)	Perimeter (mm)	Weight (kg/m)	Applicable range
FL	Φ19~Φ34	29.53	1090	8	Suitable for device of 600-1200A Wind speed≥4m/s Assembiy for anti-parallel connection&series connection

Moulding Heatsinks

FI (Fig.37)

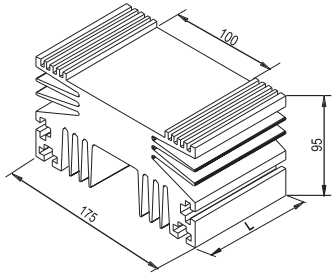

Type	Suitable case	Secyion area (cm^2)	Perimeter (mm)	Weight (kg/m)	Applicable range
FI	Φ55~Φ73	83.2	2152	23	Suitable for device of 600-1200A Wind speed≥6m/s Assembiy for anti-parallel connection&series connection Assemblies of common cathode & common anode

FF (Fig.38)

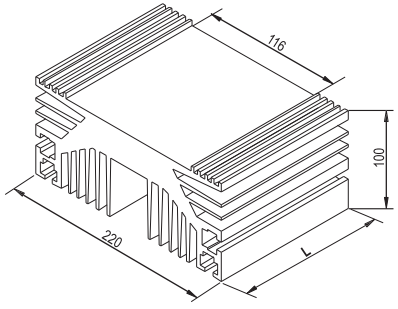

Type	Suitable case	Secyion area (cm^2)	Perimeter (mm)	Weight (kg/m)	Applicable range
FF	Φ55~Φ73	110	2233	29.7	Suitable for device of 1200-1200A Wind speed≥6m/s Assembiy for anti-parallel connection&series connection Assemblies of common cathode & common anode

FG (Fig.39)

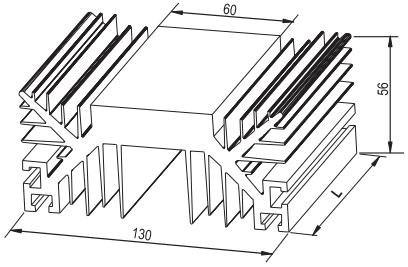

Type	Suitable case	Secyion area (cm^2)	Perimeter (mm)	Weight (kg/m)	Applicable range
FG	Φ19~Φ45	32.6	1371	8.8	Suitable for device of 200-400A Wind speed≥4m/s Assembiy for anti-parallel connection&series connection Assemblies of common cathode & common anode

FAI (Fig.40)

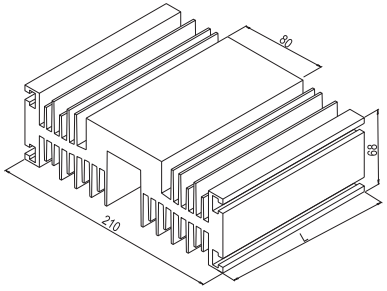

Type	Suitable case	Secyion area (cm^2)	Perimeter (mm)	Weight (kg/m)	Applicable range
FAI	Φ34~Φ64	66.9	2276	16.5	Suitable for device of 800-1600A Wind speed≥4 m/s Assembiy for anti-parallel connection&series connection Assemblies of common cathode & common anode

FAE(Fig.41)

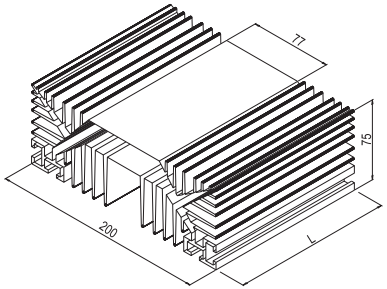

Type	Suitable case	Secyion area (cm^2)	Perimeter (mm)	Weight (kg/m)	Applicable range
FAE	Φ34~Φ63	63.1	2387	15.5	Suitable for device of 800-1600A Wind speed≥4 m/s Assembiy for anti-parallel connection&series connection Assemblies of common cathode & common anode

FAD(Fig.42)

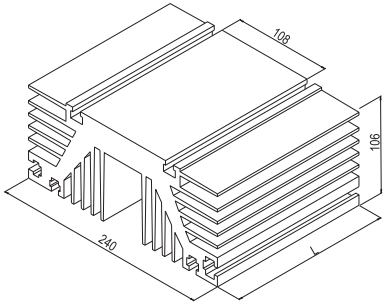

Type	Suitable case	Secyion area (cm^2)	Perimeter (mm)	Weight (kg/m)	Applicable range
FAD	Φ55~Φ100	118.3	2879	32	Suitable for device of 1200-2500A Wind speed≥6 m/s Assembiy for anti-parallel connection&series connection Assemblies of common cathode & common anode

FAJ(Fig.43)

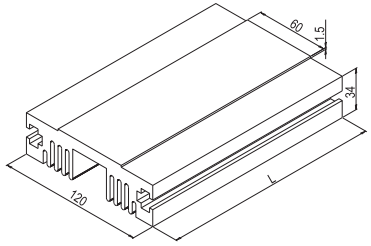

Type	Suitable case	Secyion area (cm^2)	Perimeter (mm)	Weight (kg/m)	Applicable range
FAJ	Φ25~Φ45	24.1	750	6.49	Suitable for device of 200-1000A Wind speed≥4 m/s Assembiy for anti-parallel connection&series connection Assemblies of common cathode & common anode

FAK (Fig.44)

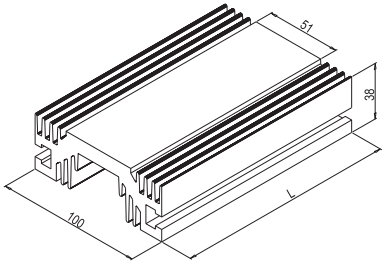

Type	Suitable case	Secyion area (cm^2)	Perimeter (mm)	Weight (kg/m)	Applicable range
FAK	Φ25~Φ42	18.6	718	4.93	Suitable for device of 200-800A Wind speed≥4 m/s Assembiy for anti-parallel connection&series connection Assemblies of common cathode & common anode

FAQ(Fig.45)

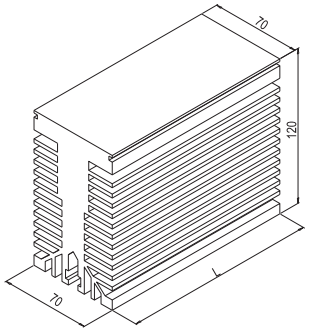

Type	Suitable case	Secyion area (cm^2)	Perimeter (mm)	Weight (kg/m)	Applicable range
FAQ	Φ34~Φ47	50.9	1436	13.75	Suitable for device of 600-1200A Wind speed≥4 m/s Assembiy for anti-parallel connection&series connection Assemblies of common cathode & common anode

FAN(Fig.46)

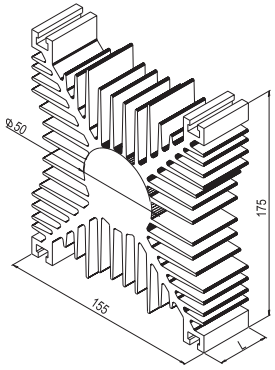

Type	Suitable case	Secyion area (cm^2)	Perimeter (mm)	Weight (kg/m)	Applicable range
FAN	Φ25~Φ55	101.3	3785	13.75	Suitable for device of 300-1200A Wind speed≥4 m/s Assembiy for anti-parallel connection&series connection Assemblies of common cathode & common anode

ZFxS (Fig.47)

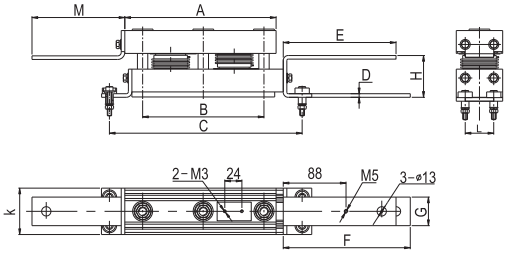

Type	A	B	C	D	E	F	G	H	K	L	M
ZFAS	212	170	270	5	158	178	40	59. 5	65	40	130
ZFBS	242	200	300	6	162	182	40	60	78	40	130
ZFCS	322	280	380	8	172	192	50	62. 5	115	60	140

ZFx (Fig.48)

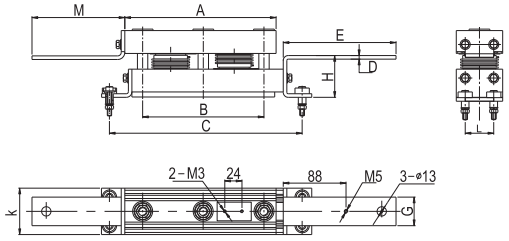

Type	A	B	C	D	E	G	H	K	L	M
ZFA	212	170	270	5	158	40	59. 5	65	40	130
ZFB	242	200	300	6	162	40	60	78	40	130
ZFC	322	280	380	8	172	50	62. 5	115	60	140

Letter Symbols and Terms

Symbols	Characteristic
di/dt	Critical rate of rise of on-state current
dv/dt	Critical rate of rise of off-state voltage
I^2t	I^2t value
I_d	Direct output current (of a rectifier connection)
I_{DRM}	Repetitve peak off-state current
$I_{F(AV)}$	Mean forward current
I_{FM}	Peak forward current
$I_{F(RMS)}$	RMS forward current
I_{FSM}	Surge forward current
I_G	Gate current
I_{GD}	Gate non-trigger current
I_{GT}	Gate trigger current
I_P	Repetitive peak sine pulse current of RSD
I_H	Holding current
I_{RRM}	Repetitive peak reverse current
$I_{T(AV)}$	Mean on-state current
$I_{T(RMS)}$	RMS on-state current
I_{TM}	Peak on-state current
I_{TSM}	Surge on-state current
Q_{rr}	Reverse recovery charge
r_T	On-state slope resistance
r_F	Forward slope resistance
R_{th}	Thermal resistance
$R_{th(c-hs)}$	Contact thermal resistance case to heatsink
$R_{th(h-a)}$	Thermal resistance heatsink to ambient air
$R_{th(j-c)}$	Thermal resistance junction to case

Symbols	Characteristic
$R_{th(j-hs)}$	Thermal resistance junction to heatsink
T_a	Ambient temperature
T_C	Case temperature
T_{HS}	Heatsink temperature
T_j	Junction temperature
T_{jm}	Max. junction temperature
T_{stg}	Storage temperature
t_p	Pulse duration
t_q	Circuit commutated turn-off time
t_{rr}	Reverse recovery time
V_D	Direct output voltage
V_{DRM}	Repetitive peak off-state voltage
V_{DSM}	Non-repetitive peak off-state voltage
V_{FM}	Peak forward voltage
V_{FO}	Forward threshold voltage
V_G	Gate voltage
V_{GT}	Gate trigger voltage
V_{GD}	Gate non-trigger voltage
V_{iso}	Isolation voltage
V_{RRM}	Repetitive peak reverse blocking voltage
V_{TO}	On-state threshold voltage
V_{RSM}	Non-repetitive peak reverse blocking voltage
V_T	On-state voltage
V_{TM}	Peak on-state voltage